NMT EE 589 & UNM ME 482/582

ROBOT ENGINEERING

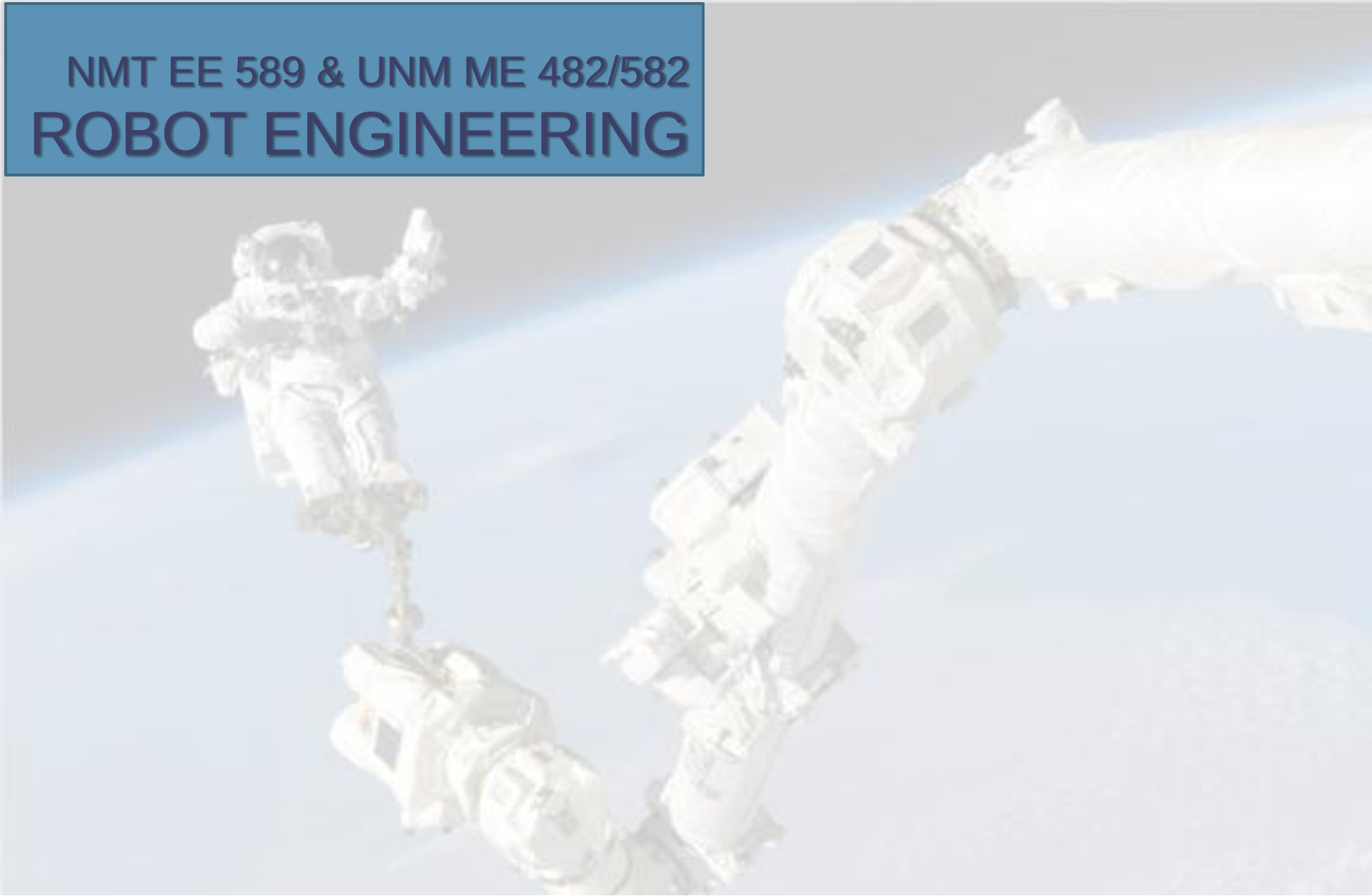

Dr. Stephen Bruder
NMT EE 589 & UNM ME 482/582

Robot Kinematics

- **Kinematics is the science of motion without regard to the forces giving rise to the motion.**
- **Due to mechanical considerations manipulators are generally constructed with joints exhibiting only one degree of freedom each. Typically, these are rotational or translational.**

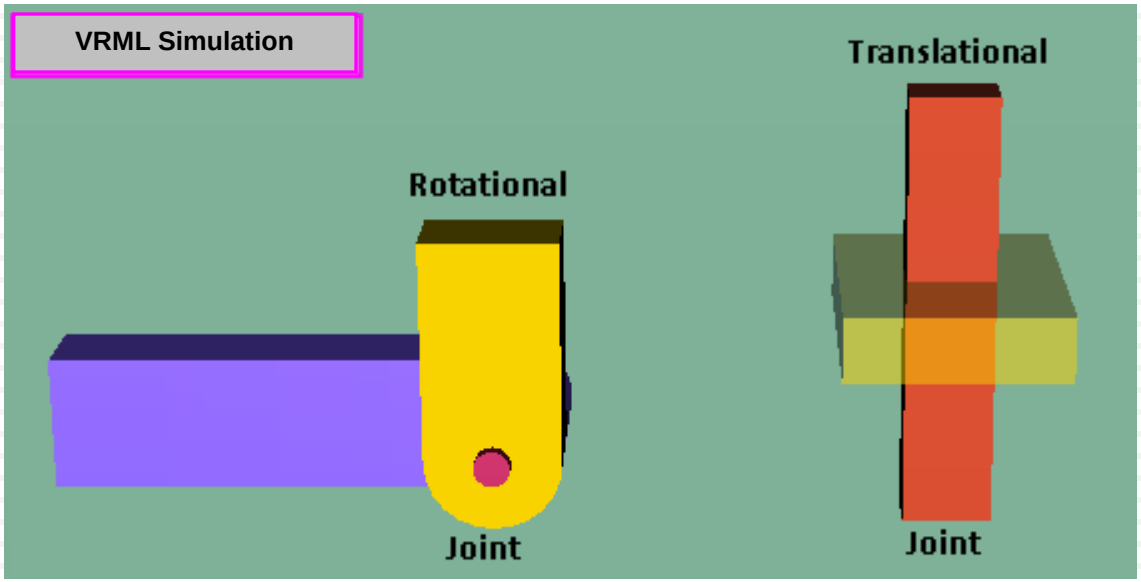

3.1 Forward Kinematics

- To solve the forward kinematics problem we would like to attach a virtual coordinate system to each and every link of the manipulator.
- For reference purposes we may also place frames on the robot's stationary base and out at the gripper (or tool-tip).
- Recalling that an arbitrarily located coordinate frame requires 6-parameters to uniquely describe its pose, it seems counter-intuitive that we will now proceed to use only 4-parameters (the justification for this will follow).
- There exist many approaches to this problem, however, herein we will employ the so-called <u>modified</u> Denavit-Hartenburg approach.

<u>NOTE</u>: Be careful as some other textbooks use the standard Denavit-Hartenburg notation!!!

- **The following figure illustrates the four D-H parameters:**

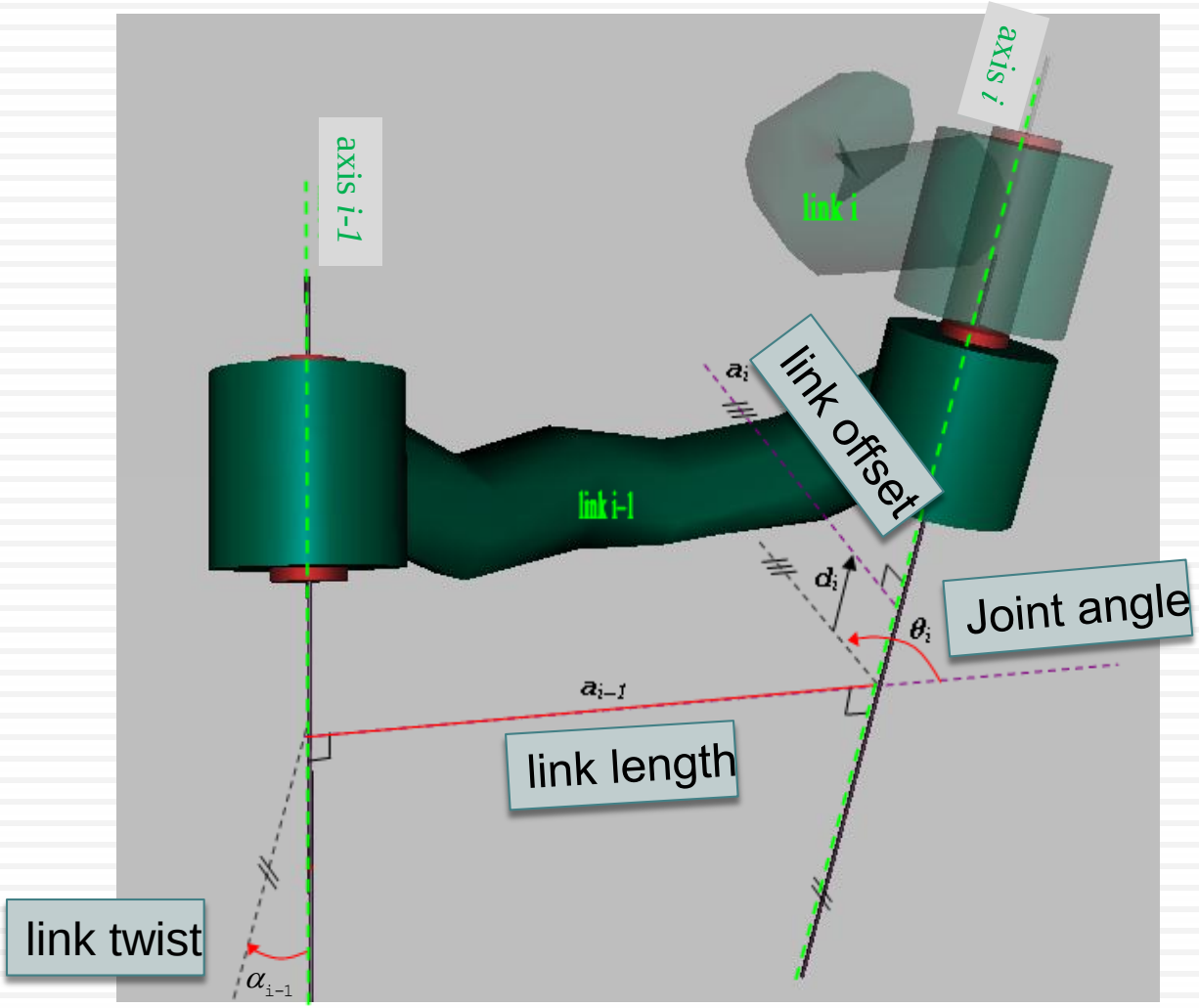

- **link twist:**

α_{i-1} Consider a plane whose normal is the vector $\vec{a}_{i-1}$ (from $i-1$ to i), project both axis $i-1$ and axis i onto this plane, then the angle from axis $i-1$ to axis i is α_{i-1} (in the right hand sense). If both axes intersect, then the sign of α_{i-1} is undefined. (Intuitively, translate axis i to axis $i-1$ along $\vec{a}_{i-1}$, then α_{i-1} is the angle between them).

- **link length:**

a_{i-1} The length along the line which is mutually perpendicular to axis $i-1$ and axis i. Assuming that they are not parallel, then the points of intersection on both axes are unique. (Intuitively, think of expanding a cylinder centered around axis $i-1$, draw the radius to the point when it just touches axis i).

- **link offset:** If the link is prismatic then d_i is the joint variable

d_i Consider the point on axis i where $\vec{a}_{i-1}$ meets it and also the point where $\vec{a}_i$ intersects axis i. The signed distance along axis i from $\vec{a}_{i-1}$ to $\vec{a}_i$ is known as the link offset.

- **joint angle:** If the link is revolute then θ_i is the joint variable

θ_i This is the angle formed between an extension of $\vec{a}_{i-1}$ and the vector $\vec{a}_i$ about axis i. (Right hand rule, thumb in the direction of $\vec{d}_i$, rotate from $\vec{a}_{i-1}$ to $\vec{a}_i$).

- **These four parameters ($\mathrm{a_{i-1}}$, $\alpha_{\mathrm{i-1}}$, $\mathrm{d_i}$, and θ_{i}) constitute the four (modified) Denavit-Hartenberg parameters.**
- **Having discussed the D-H parameters it is still intuitive to think in terms of transformations between coordinate frames. Thus, we need to select a convention to affix coordinate frames to links.**
- **Consider the axis $i-1$ to axis i.**

  i. Identify the joint axes and draw ∞ lines along them.

  ii. Assign the link ($i-1^{\text{th}}$) coordinate frame origin at the point along the axis $i-1$ where the mutual perpendicular (between axis $i-1$ and axis i) meets it.

  iii. Assign the $\hat{\vec{z}}_{i-1}$ direction along the $i-1^{\text{th}}$ axis.

  iv. Assign the $\hat{\vec{x}}_{i-1}$ axis along the mutual perpendicular, from $\hat{\vec{z}}_{i-1}$ to $\hat{\vec{z}}_i$.

  v. Include the $\hat{\vec{y}}_{i-1}$ axis to complete the coordinate system.

  vi. Add a base frame {0} and a tool frame (if desired).

3.1 Forward Kinematics

- **As a simplifying convention for the first (and last) links, we may wish to assign frame {0} to match frame {1} when the first joint variable is zero (i.*e.*, when $\theta_1 = 0$ or $d_1 = 0$).**

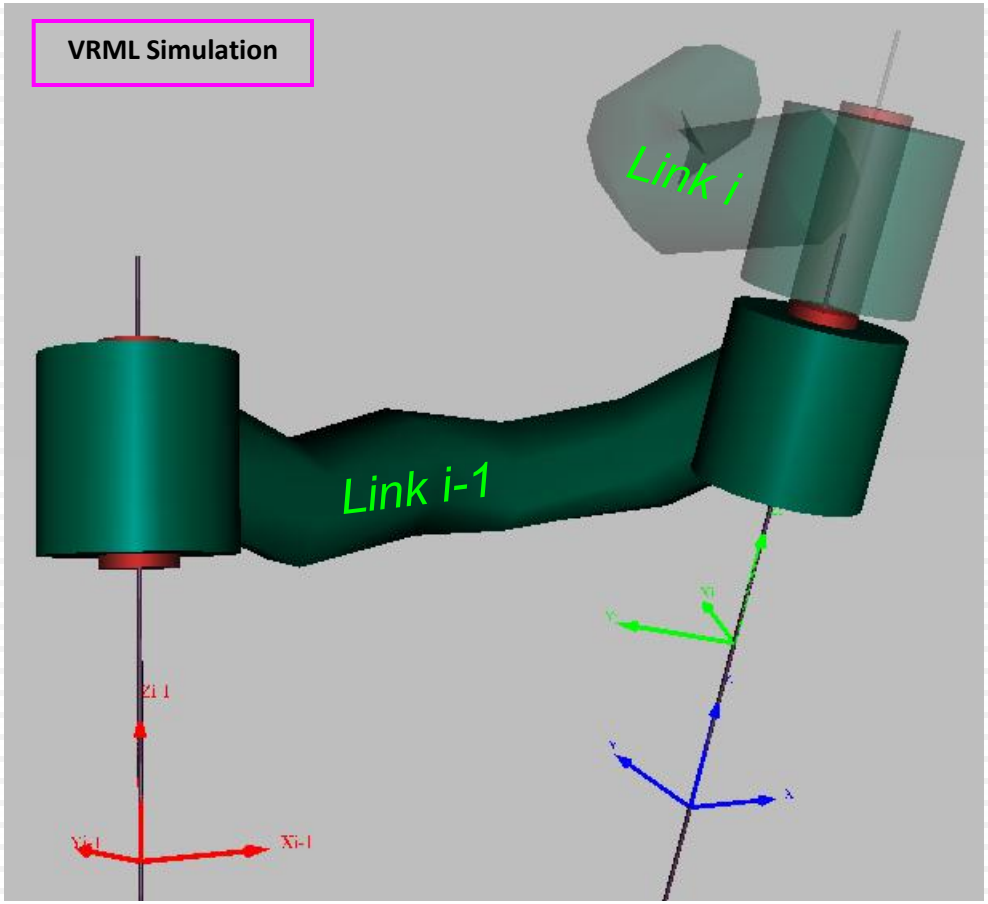

- **We can now construct the homogeneous transformation matrix relating coordinate frames {*i*–1} and {*i*}. To describe {*i*} as seen from {*i*–1}:**

1) Rotate about $\hat{\vec{x}}_{i-1}$ by $\alpha_{\mathrm{i}-1}$.
2) Then, translate about $\hat{\vec{x}}_{i-1}$ by $\mathrm{a}_{\mathrm{i}-1}$.
3) Next, rotate about the new z-axis (axis i) by θ_{i}.
4) Finally, translate along the new *z*-axis (axis i) by d_{i}.

Note that these are all relative type transformations!!

- **Hence,**

$$
{}^{i-1}_{\ \ i}T = R_{(\hat{\vec{x}},\alpha_{i-1})} D_{(\hat{\vec{x}},a_{i-1})} R_{(\hat{\vec{z}},\theta_i)} D_{(\hat{\vec{z}},d_i)}
$$

$$
= \begin{bmatrix} 1 & 0 & 0 & 0 \\ 0 & C_{\alpha_{i-1}} & -S_{\alpha_{i-1}} & 0 \\ 0 & S_{\alpha_{i-1}} & C_{\alpha_{i-1}} & 0 \\ 0 & 0 & 0 & 1 \end{bmatrix} \begin{bmatrix} 1 & 0 & 0 & a_{i-1} \\ 0 & 1 & 0 & 0 \\ 0 & 0 & 1 & 0 \\ 0 & 0 & 0 & 1 \end{bmatrix} \begin{bmatrix} C_{\theta_i} & -S_{\theta_i} & 0 & 0 \\ S_{\theta_i} & C_{\theta_i} & 0 & 0 \\ 0 & 0 & 1 & 0 \\ 0 & 0 & 0 & 1 \end{bmatrix} \begin{bmatrix} 1 & 0 & 0 & 0 \\ 0 & 1 & 0 & 0 \\ 0 & 0 & 1 & d_i \\ 0 & 0 & 0 & 1 \end{bmatrix}
$$

$$
= \begin{bmatrix} 1 & 0 & 0 & a_{i-1} \\ 0 & C_{\alpha_{i-1}} & -S_{\alpha_{i-1}} & 0 \\ 0 & S_{\alpha_{i-1}} & C_{\alpha_{i-1}} & 0 \\ 0 & 0 & 0 & 1 \end{bmatrix} \begin{bmatrix} C_{\theta_i} & -S_{\theta_i} & 0 & 0 \\ S_{\theta_i} & C_{\theta_i} & 0 & 0 \\ 0 & 0 & 1 & d_i \\ 0 & 0 & 0 & 1 \end{bmatrix}
$$

$$
= \begin{bmatrix} C_{\theta_i} & -S_{\theta_i} & 0 & a_{i-1} \\ S_{\theta_i} C_{\alpha_{i-1}} & C_{\theta_i} C_{\alpha_{i-1}} & -S_{\alpha_{i-1}} & -S_{\alpha_{i-1}} d_i \\ S_{\theta_i} S_{\alpha_{i-1}} & C_{\theta_i} S_{\alpha_{i-1}} & C_{\alpha_{i-1}} & C_{\alpha_{i-1}} d_i \\ 0 & 0 & 0 & 1 \end{bmatrix} \qquad \textbf{(3.1)}
$$

- **Thus, equation (3.1) represents a description of the link coordinate frame $\{i\}$ in terms of (or as seen from) the link coordinate frame $\{i-1\}$, using the 4 D-H parameters.**
- **Question:**
  - How is it that we need only 4-parameters to describe the pose of a frame?
- **Answer:**
  - By cleverly choosing $\{i\}$ *wrt* $\{i-1\}$, *i.e.,* we restrict:
    i) the $\hat{\vec{x}}_{i-1}$ axis to intersect $\hat{\vec{z}}_i$, and
    ii) the $\hat{\vec{x}}_{i-1}$ axis to be perpendicular to $\hat{\vec{z}}_i$.
  - These two restrictions effectively constrain the dimensionality of the relationship between the two coordinate frames in question.
  - If these two conditions are not upheld then the 4 D-H parameters will **NOT** be sufficient !!!

- **Remark:**
  - Notice that steps 1) and 2) can be interchanged (they commute).

$$\Rightarrow \qquad R_{(\hat{\vec{x}},\alpha_{i-1})} D_{(\hat{\vec{x}},\mathrm{a}_{i-1})} = D_{(\hat{\vec{x}},\mathrm{a}_{i-1})} R_{(\hat{\vec{x}},\alpha_{i-1})}$$

  - Similarly, steps 3) and 4) can be interchanged (they commute).

$$\Rightarrow \qquad R_{(\hat{\vec{z}},\theta_i)} D_{(\hat{\vec{z}},\mathrm{d}_i)} = D_{(\hat{\vec{z}},\mathrm{d}_i)} R_{(\hat{\vec{z}},\theta_i)}$$

  - In general, rotations and translations about the same axis will commute!!

Example:

- **An example of a 3-degree of freedom (rotary-rotary-prismatic) RRP robot.**

  i. Identify the joint axes and draw ∞ lines along them.

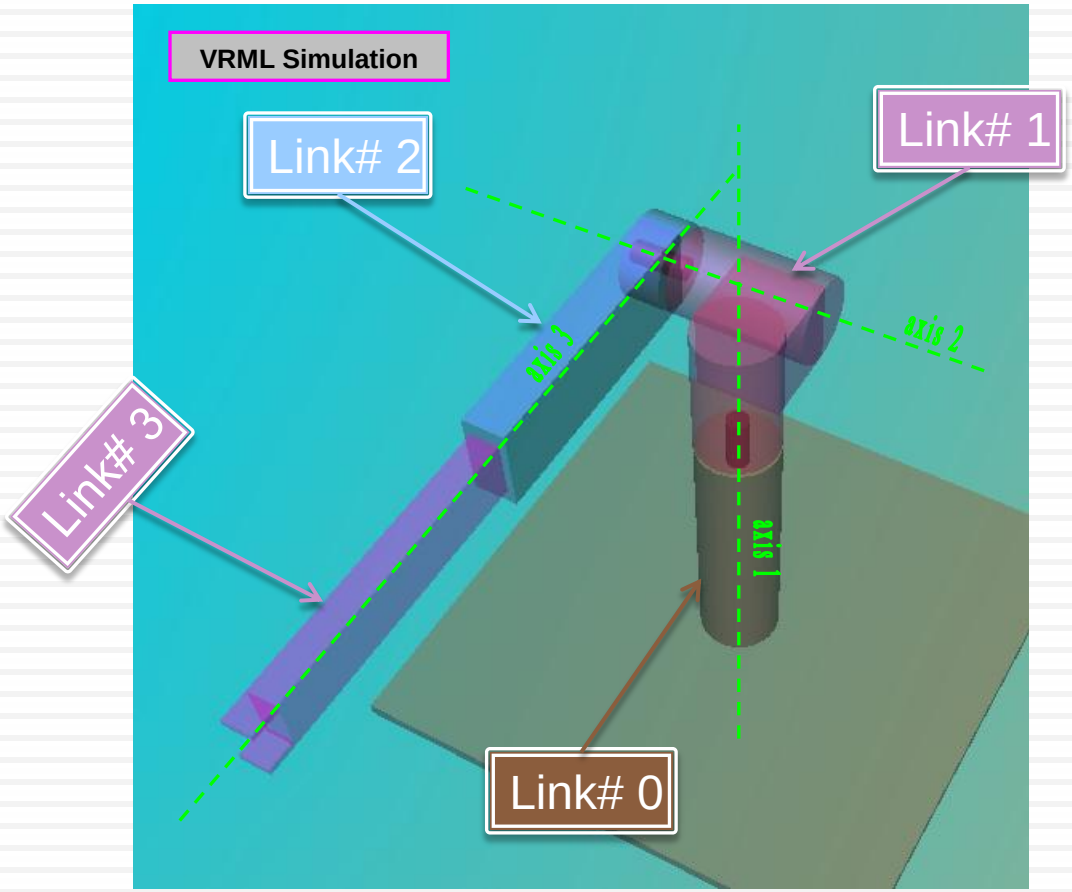

ii. Assign the link ($i-1^{\text{th}}$) coordinate frame origin at the point along the axis $i-1$ where the mutual perpendicular (between axis $i-1$ and axis i) meets it.

Note: Since there is no mutual perpendicular between axis 3 and axis 4 (non-existent), the origin of frame {3} can be placed anywhere on axis 3.

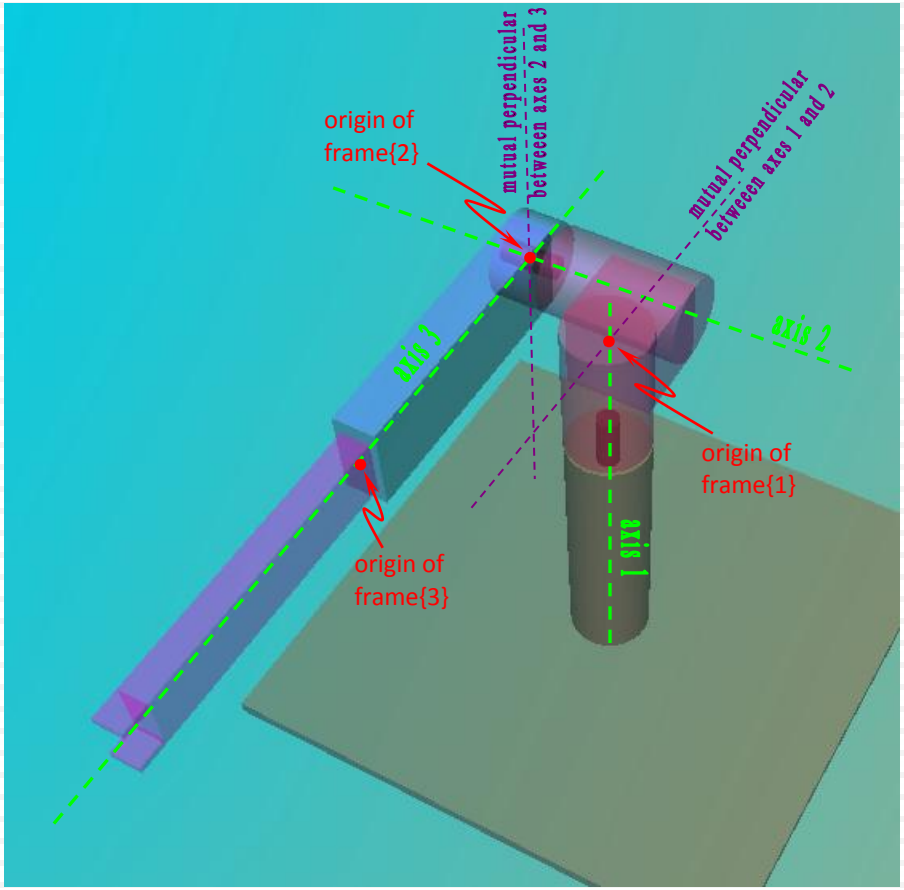

iii. Assign the $\hat{\vec{z}}_{i-1}$ direction along the $i-1^{\text{th}}$ axis.

Note: The direction of z-axis is not unique. The negative of what we have chosen would work just fine!!

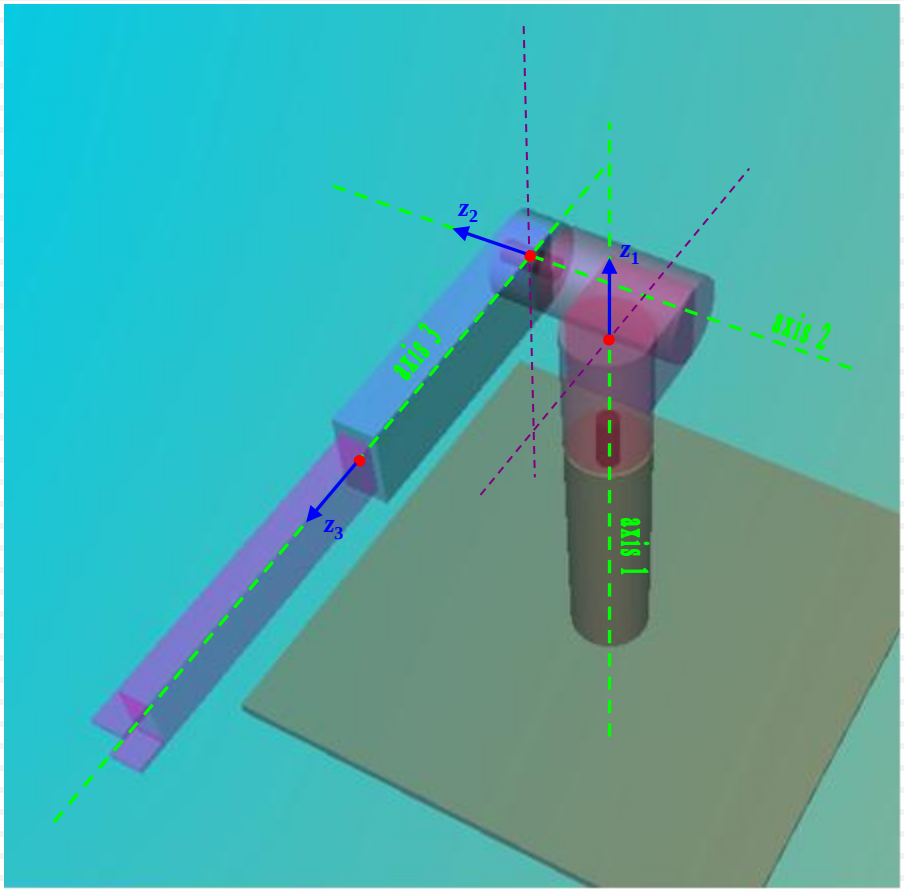

iv. Assign the $\hat{\vec{x}}_{i-1}$ axis along the mutual perpendicular, from $\hat{\vec{z}}_{i-1}$ to $\hat{\vec{z}}_i$.

- For i = 2, $\hat{\vec{x}}_1$ axis from $\hat{\vec{z}}_1$ to $\hat{\vec{z}}_2$ (unique).
- For i = 3, $\hat{\vec{x}}_2$ axis from $\hat{\vec{z}}_2$ to $\hat{\vec{z}}_3$ (not unique since axis 2 and axis 3 intersect).
- For i = 4, $\hat{\vec{x}}_3$ axis from $\hat{\vec{z}}_3$ to $\hat{\vec{z}}_4$ (not unique since axis 4 does not exist).

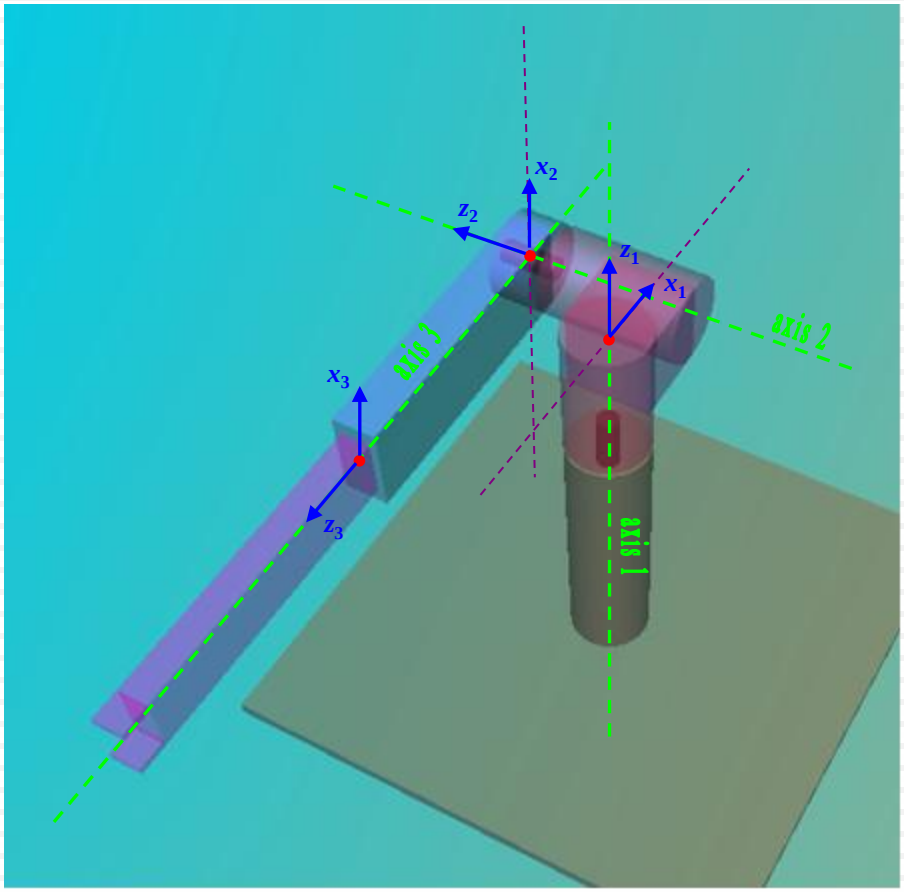

3.1 Forward Kinematics

v. Include the $\hat{\vec{y}}_{i-1}$ axis to complete the coordinate system.
Recall: Right-hand coordinate system.

vi. Add a base frame {0} and a tool frame (if desired).

Note: Must adhere to the two D-H constraints when choosing frames {0} & {4}!

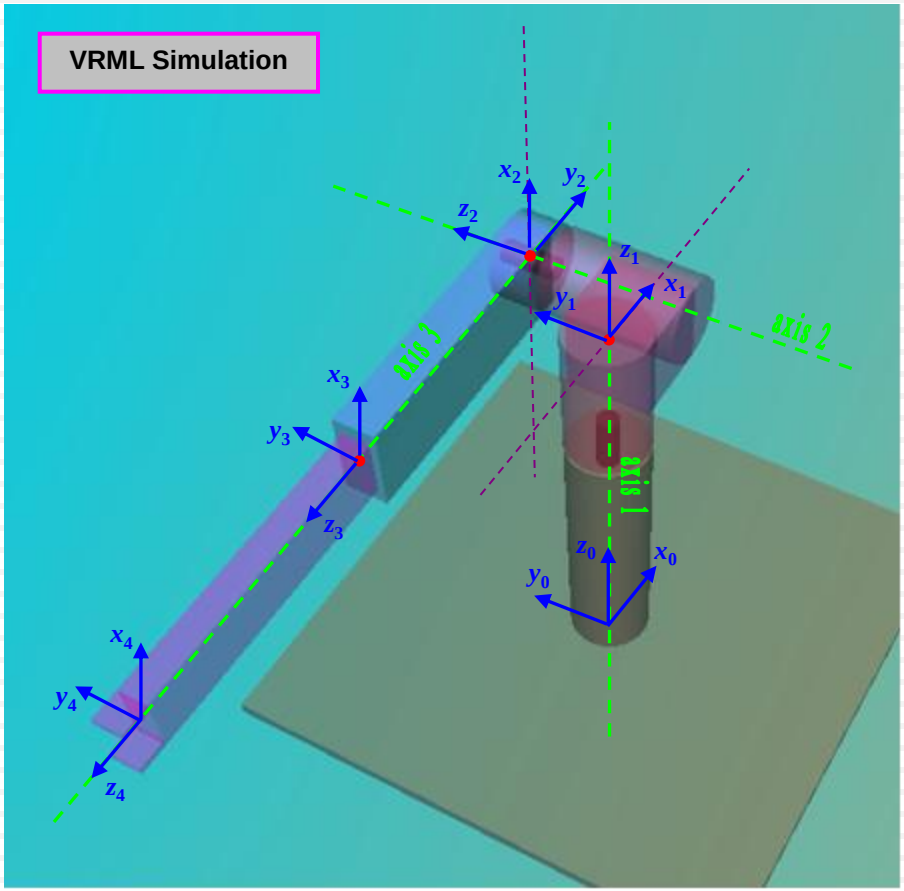

Rules to determine the four D-H parameters:

- **Before starting, be sure that for each frame the *x*-axis points to and is perpendicular to the next *z*-axis:**
  - This allow us to use only 4-parameters
  - Otherwise DH constraints will NOT be upheld

- **Link #1 (From frame {0} to frame {1} : i=1)**
  - Link Twist (α_{i-1}): $\alpha_0 = 0°$
    - Rotate about $\hat{\vec{x}}_0$ by α_0 resulting in the *z*-axis becoming parallel with the next *z*-axis.
  - Link Length (a_{i-1}): $a_0 = 0$
    - Translate along $\hat{\vec{x}}_0$ by a_0. This will result in the current *z*-axis becoming collinear with the next *z*-axis.
  - Link Offset (d_i): d_1
    - Translate along z-axis by d_1. This will result in the coordinate frame origins becoming coincident.
  - Joint Angle (θ_i): $\theta_1(t)$
    - Rotate about z-axis by θ_1. This final step should result in frame {0} coinciding with frame {1}.

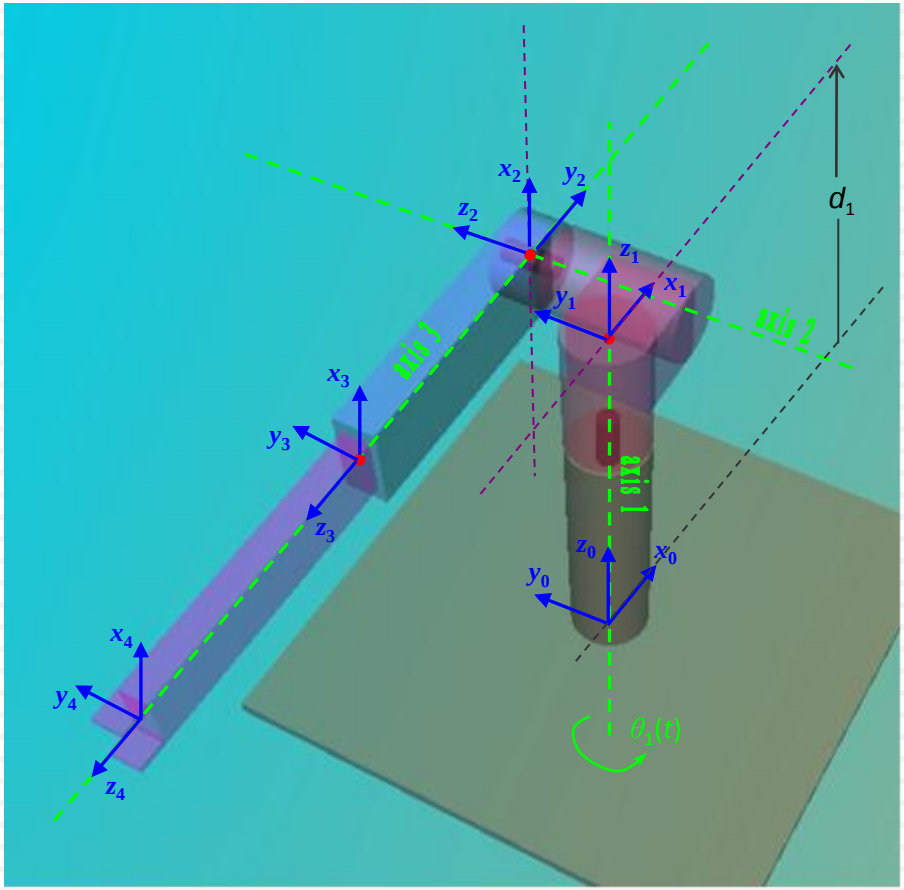

- **Link #2 (From frame {1} to frame {2} : i=2)**
  - Link Twist (α_{i-1}): $\alpha_1 = -90°$
    - Rotate about $\hat{\vec{x}}_1$ by α_1 resulting in the *z*-axis becoming parallel with the next *z*-axis.
  - Link Length (a_{i-1}): a_1
    - Translate along $\hat{\vec{x}}_1$ by a_1. This will result in the current *z*-axis becoming collinear with the next *z*-axis.
  - Link Offset (d_i): d_2
    - Translate along z-axis by d_2. This will result in the coordinate frame origins becoming coincident.
  - Joint Angle (θ_i): $\theta_2(t) - 90°$
    - Rotate about z-axis by θ_2. This final step should result in frame {1} coinciding with frame {2}.

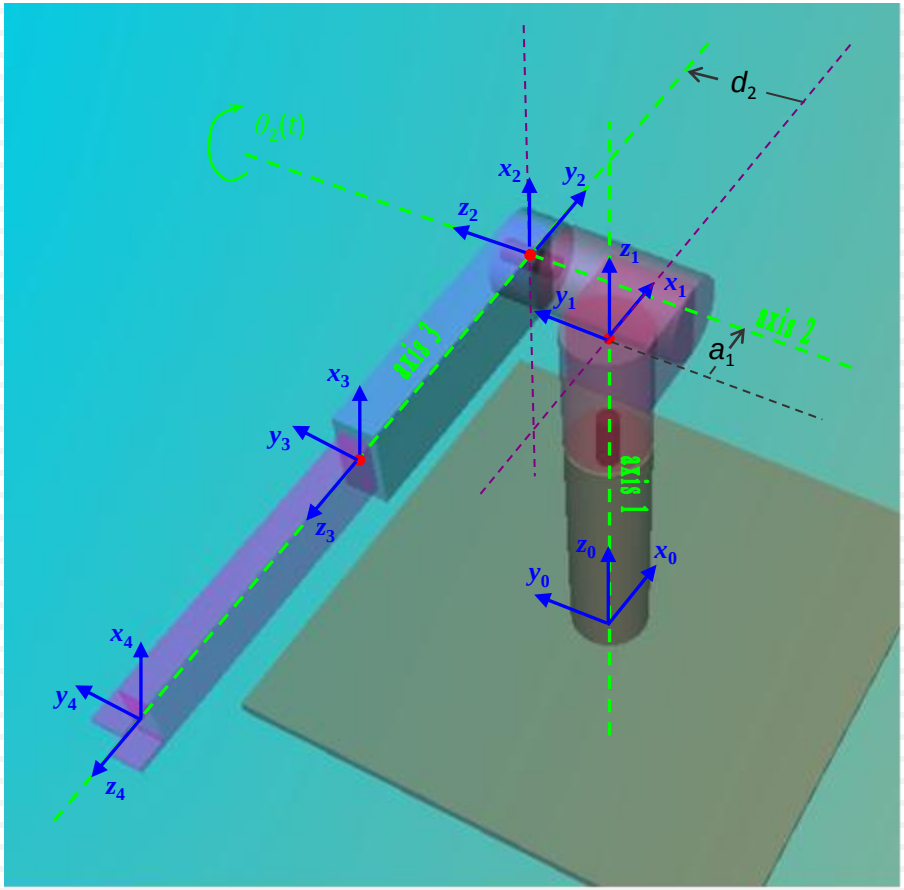

- **Link #3 (From frame {2} to frame {3} : i=3)**
  - Link Twist (α_{i-1}): $\alpha_2 = 90°$
    - Rotate about $\hat{\vec{x}}_2$ by α_2 resulting in the *z*-axis becoming parallel with the next *z*-axis.
  - Link Length (a_{i-1}): $a_2 = 0$
    - Translate along $\hat{\vec{x}}_2$ by a_2. This will result in the current *z*-axis becoming collinear with the next *z*-axis.
  - Link Offset (d_i): $d_3(t) + \bar{d}_3$
    - Translate along z-axis by d_3. This will result in the coordinate frame origins becoming coincident.
  - Joint Angle (θ_i): $\theta_3 = 0$
    - Rotate about z-axis by θ_3. This final step should result in frame {2} coinciding with frame {3}.

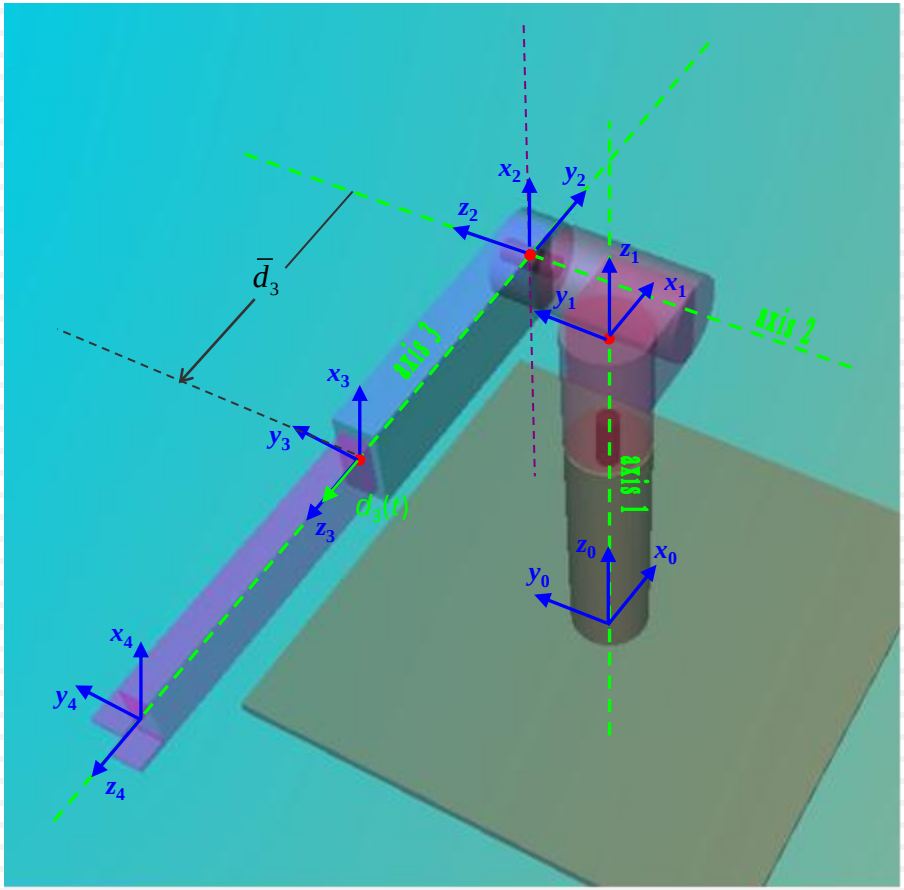

NOTE: There is NO link 4. Both frames {3} & {4} are attached to link 3

- **Link #4 (From frame {3} to frame {4} : i=4)**
  - Link Twist (α_{i-1}): $\alpha_3 = 0°$
    - Rotate about $\hat{\vec{x}}_3$ by α_3 resulting in the *z*-axis becoming parallel with the next *z*-axis.
  - Link Length (a_{i-1}): $a_3 = 0$
    - Translate along $\hat{\vec{x}}_3$ by a_3. This will result in the current *z*-axis becoming collinear with the next *z*-axis.
  - Link Offset (d_i): d_4
    - Translate along z-axis by d_4. This will result in the coordinate frame origins becoming coincident.
  - Joint Angle (θ_i): $\theta_4 = 0$
    - Rotate about z-axis by θ_4. This final step should result in frame {3} coinciding with frame {4}.

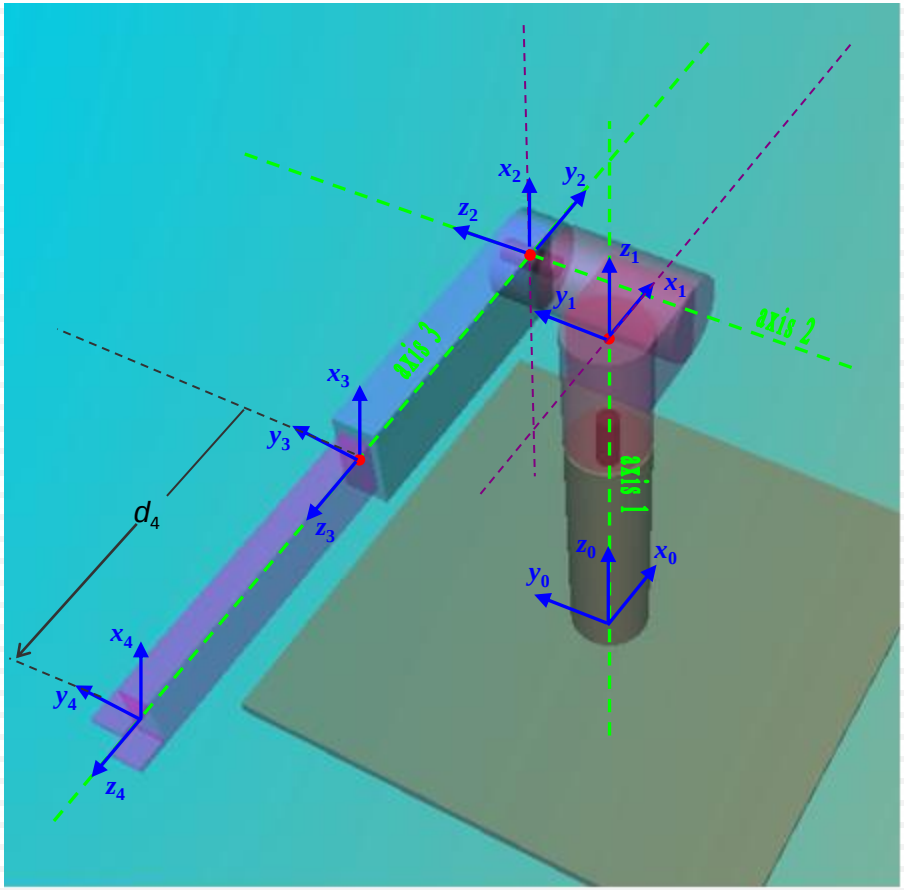

NOTE: There is NO 4th joint variable

- **NOTE: Do this one link at a time (i.e. pair of coord frames)**
  1. All of the above are relative transformations.
  2. Either the third or fourth parameter will be the joint variable.

i \ D-H params.	α_{i-1}	a_{i-1}	d_i	θ_i
1	0	0	d_1	$\theta_1(t)$
2	–90	a_1	d_2	$\theta_2(t)-90$
3	90	0	$d_3(t)+\bar{d}_3$	0
4	0	0	d_4	0

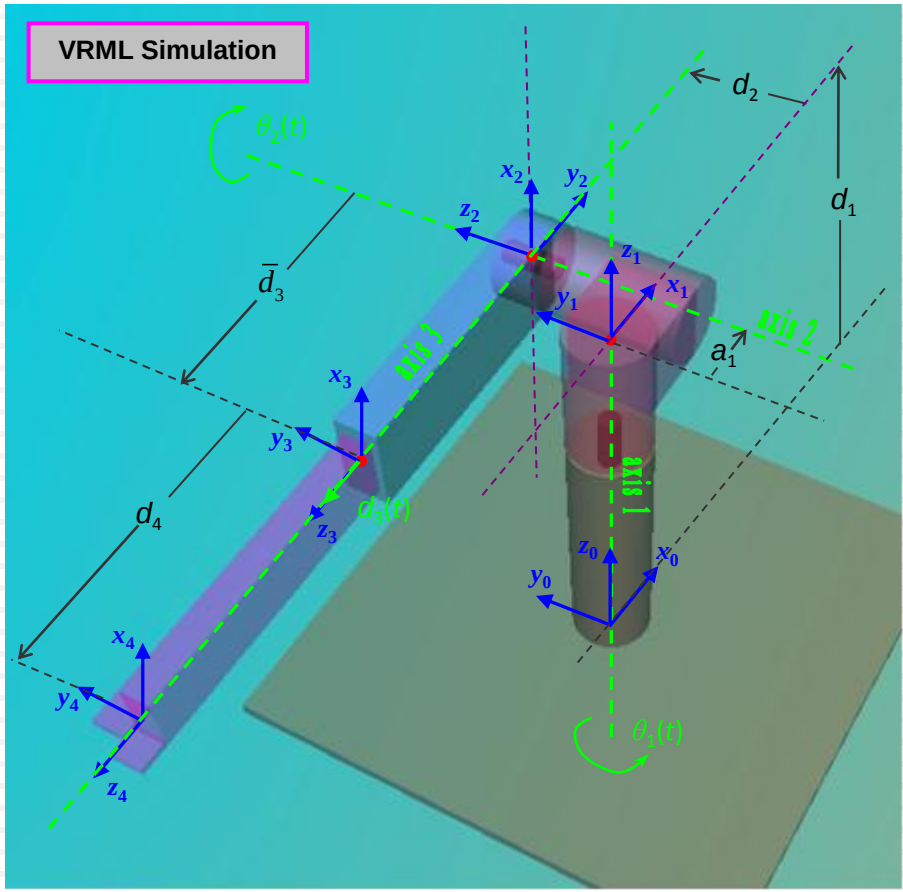

Next, generate the "T-matrices"
- Courtesy of Mathematica

- **Let us now use the D-H parameters from the link table to construct the homogeneous matrices which will relate one link coordinate frame to the next.**

$$ {}^{0}_{1}T\left(\alpha_0, \mathrm{a}_0, \mathrm{d}_1, \theta_1(t)\right) = {}^{0}_{1}T\left(0, 0, \mathrm{d}_1, \theta_1(t)\right) = \begin{bmatrix} C_1 & -S_1 & 0 & 0 \\ S_1 & C_1 & 0 & 0 \\ 0 & 0 & 1 & \mathrm{d}_1 \\ 0 & 0 & 0 & 1 \end{bmatrix} $$

$$ {}^{1}_{2}T\left(\alpha_1, \mathrm{a}_1, \mathrm{d}_2, \theta_2(t)\right) = {}^{1}_{2}T\left(-90, \mathrm{a}_1, \mathrm{d}_2, \theta_2(t) - 90\right) = \begin{bmatrix} S_2 & C_2 & 0 & \mathrm{a}_1 \\ 0 & 0 & 1 & \mathrm{d}_2 \\ C_2 & -S_2 & 0 & 0 \\ 0 & 0 & 0 & 1 \end{bmatrix} $$

$$ {}^{2}_{3}T\left(\alpha_2, \mathrm{a}_2, \mathrm{d}_3(t), \theta_3\right) = {}^{2}_{3}T\left(90, 0, \mathrm{d}_3(t) + \bar{\mathrm{d}}_3, 0\right) = \begin{bmatrix} 1 & 0 & 0 & 0 \\ 0 & 0 & -1 & -\mathrm{d}_3 - \bar{\mathrm{d}}_3 \\ 0 & 1 & 0 & 0 \\ 0 & 0 & 0 & 1 \end{bmatrix} $$

$$ {}^{3}_{4}T\left(\alpha_3, a_3, d_4, \theta_4\right) = {}^{3}_{4}T\left(0, 0, d_4, 0\right) = \begin{bmatrix} 1 & 0 & 0 & 0 \\ 0 & 1 & 0 & 0 \\ 0 & 0 & 1 & d_4 \\ 0 & 0 & 0 & 1 \end{bmatrix} $$

- **Therefore, we can now compute the coordinates of the gripper (frame {4}) as seen from the base or reference frame (frame {0}), in terms of the 3 joint variables (θ_1, θ_2, d_3).**

$$ {}^{0}_{4}T = {}^{0}_{1}T\,{}^{1}_{2}T\,{}^{2}_{3}T\,{}^{3}_{4}T $$

$$ = \begin{bmatrix} C_1S_2 & -S_1 & -C_1C_2 & C_1\left(a_1 - C_2\left(\bar{d}_3 + d_3 + d_4\right)\right) - d_2S_1 \\ S_1S_2 & C_1 & -C_2S_1 & S_1\left(a_1 - C_2\left(\bar{d}_3 + d_3 + d_4\right)\right) + C_1d_2 \\ C_2 & 0 & S_2 & S_2\left(\bar{d}_3 + d_3 + d_4\right) + d_1 \\ 0 & 0 & 0 & 1 \end{bmatrix} \qquad \textbf{(3.2)} $$