NMT EE 589 & UNM ME 482/582
ROBOT ENGINEERING

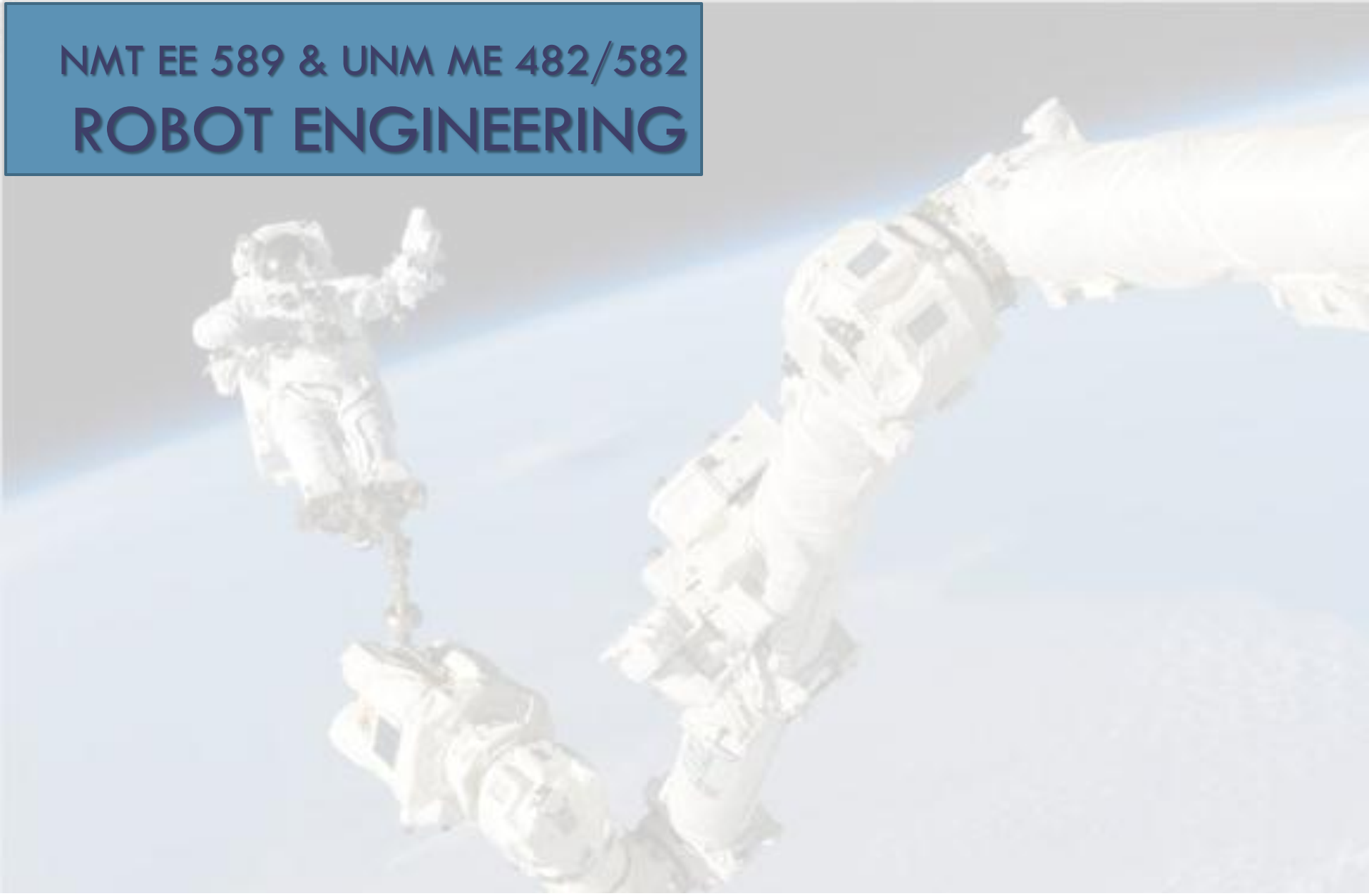

Dr. Stephen Bruder
NMT EE 589 & UNM ME 482/582

- **Lets use the Robotics Toolbox to review the last example: "RRP_3DOF_example1.m"**

D-H params. i	α_{i-1}	a_{i-1}	d_i	θ_i
1	0	0	d_1	$\theta_1(t)$
2	–90	a_1	d_2	$\theta_2(t) - 90$
3	90	0	$d_3(t) + \bar{d}_3$	0
4	0	0	d_4	0

0 ⇒ Rotary Joint

```
%
%   Define the D-H table for the RRP robot
%
alpha0 = 0; a0=0; d1=3; theta1=0;                % DH table row: i=1
L(1) = Link([theta1 d1 a0 alpha0 0 0], 'modified');   % We use the modified DH

alpha1 = -90*pi/180; a1=1; d2=2; theta2=0;       % DH table row: i=2
L(2) = Link([theta2 d2 a1 alpha1 0 -90*pi/180], 'modified'); % We use the modified DH

alpha2 = 90*pi/180; a2=0; d3=0; theta3=0;        % DH table row: i=3
L(3) = Link([theta3 d3 a2 alpha2 1 2], 'modified');   % We use the modified DH

RRP_robot = SerialLink(L, 'name', 'RRP Robot')
…
```

0 ⇒ Prismatic Joint

- **Add link frames: "RRP_3DOF_example2.m"**

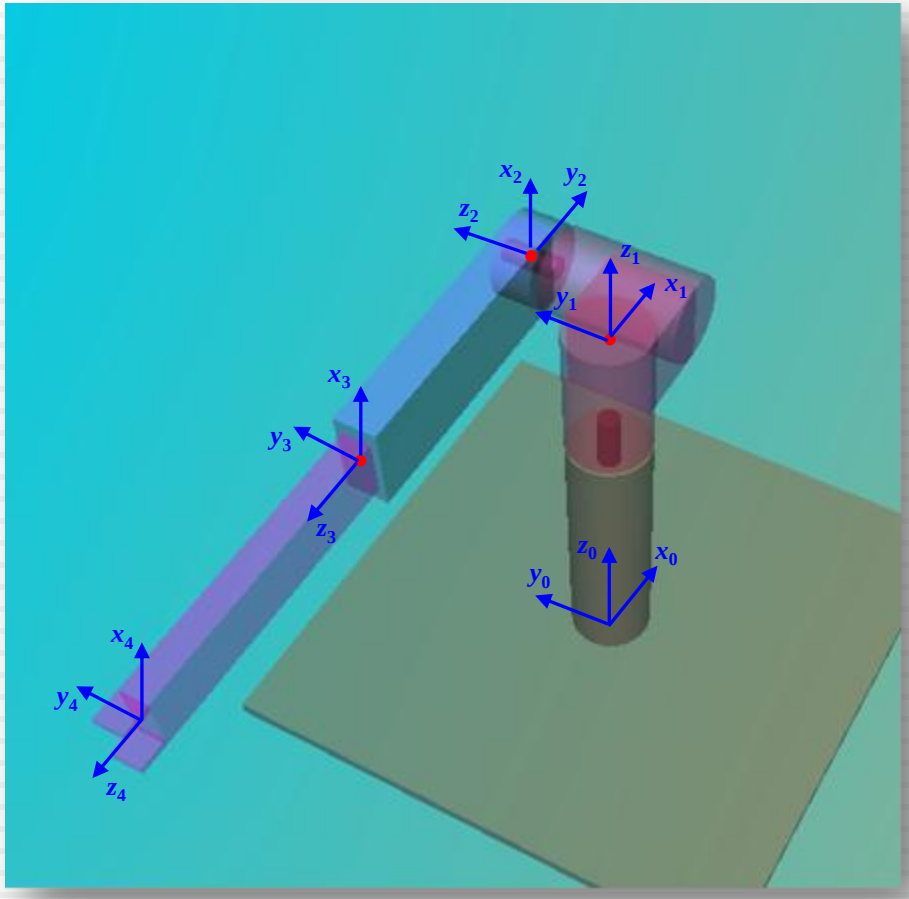

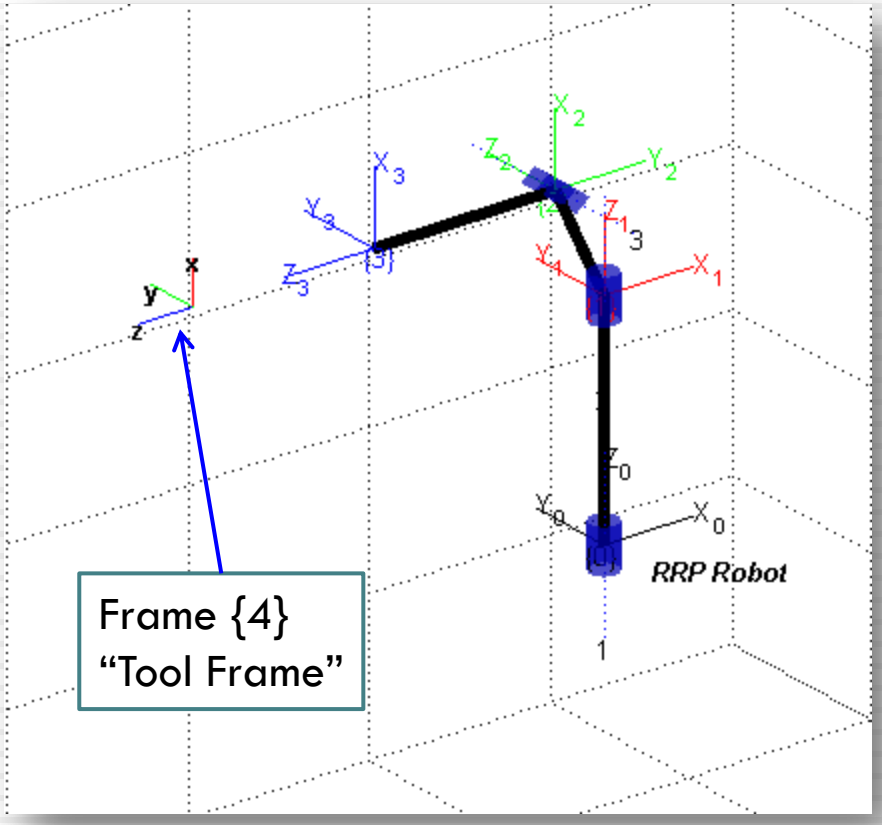

Example:

- **An alternative solution to the last example.**
  - Noting that some of the choices made when affixing the link coordinate frames were not unique, it seems reasonable to see if there might be alternatives which might lead to a simpler D-H table.
  - Let us first redraw the manipulator in the "kinematic home position". This basically refers to the configuration of the robot wherein all the joint variables θ_i's (and d_i's) are set to zero (*i.e.*, $\vec{\theta}(t) = \vec{0}$) and all offsets are "unwound".
  - Also, let us choose to place frame {0} to be coincident with frame {1} when the first joint variable $\theta_1 = 0$.
  - Frame {4} is unnecessary as frame {3} is also fixed *wrt* the gripper. Furthermore, frame {3} can be chosen such that the z-axis offset between {2} and {3} is zero (*i.e.*, $\bar{d}_3 = 0$).

The Denavit-Hartenberg table:

i (D-H params.)	α_{i-1}	a_{i-1}	d_i	θ_i
1	0	0	0	$\theta_1(t)$
2	–90	a_1	d_2	$\theta_2(t)$
3	90	0	$d_3(t)$	0

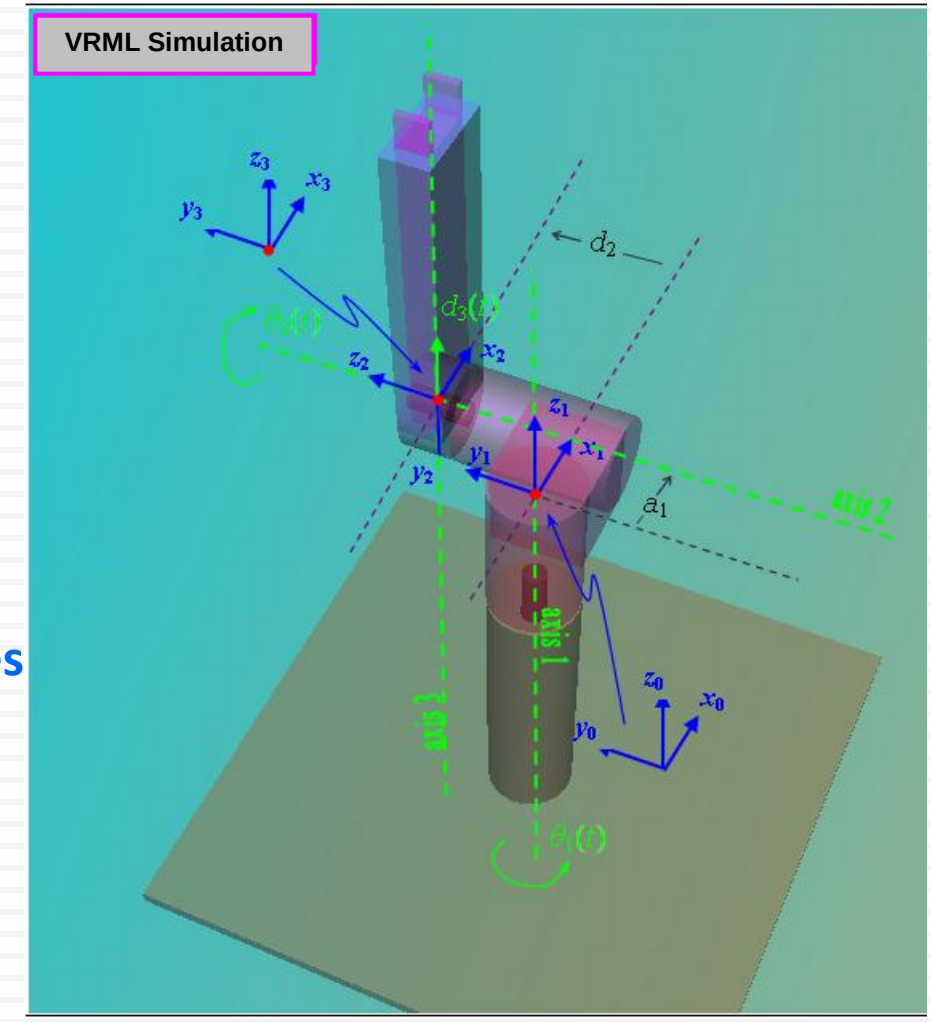

- **We can again generate the "T-matrices**

Next, generate the "T-matrices"
- Courtesy of Mathematica
  - Thur 13 Sept Example.pdf

- **Let us now use the D-H parameters from the link table to construct the homogeneous matrices which will relate one link coordinate frame to the next.**

$$ {}^{0}_{1}T\left(\alpha_0, a_0, d_1, \theta_1(t)\right) = {}^{0}_{1}T\left(0, 0, 0, \theta_1(t)\right) = \begin{bmatrix} C_1 & -S_1 & 0 & 0 \\ S_1 & C_1 & 0 & 0 \\ 0 & 0 & 1 & 0 \\ 0 & 0 & 0 & 1 \end{bmatrix} $$

$$ {}^{1}_{2}T\left(\alpha_1, a_1, d_2, \theta_2(t)\right) = {}^{1}_{2}T\left(-90, a_1, d_2, \theta_2(t)\right) = \begin{bmatrix} C_2 & -S_2 & 0 & a_1 \\ 0 & 0 & 1 & d_2 \\ -S_2 & -C_2 & 0 & 0 \\ 0 & 0 & 0 & 1 \end{bmatrix} $$

$$ {}^{2}_{3}T\left(\alpha_2, a_2, d_3(t), \theta_3\right) = {}^{2}_{3}T\left(90, 0, d_3(t), 0\right) = \begin{bmatrix} 1 & 0 & 0 & 0 \\ 0 & 0 & -1 & -d_3 \\ 0 & 1 & 0 & 0 \\ 0 & 0 & 0 & 1 \end{bmatrix} $$

- **Therefore, we can now compute the coordinates of link 3 (frame {3}) as seen from the base or inertial (frame {0}) frame of reference, in terms of the 3 joint variables (θ_1, θ_2, d_3).**

$$
{}^{0}_{3}T = {}^{0}_{1}T\,{}^{1}_{2}T\,{}^{2}_{3}T
$$

$$
= \begin{bmatrix} C_1C_2 & -S_1 & C_1S_2 & -d_2S_1 + C_1(a_1 + d_3S_2) \\ C_2S_1 & C_1 & S_1S_2 & C_1d_2 + S_1(a_1 + d_3S_2) \\ -S_2 & 0 & C_2 & C_2d_3 \\ 0 & 0 & 0 & 1 \end{bmatrix} \qquad \textbf{(3.3)}
$$

- **Compare the expression we now have via equation (3.3) with the expression we previously obtained in equation (3.2). This expression is obviously simpler!!**

Example:

- A more advanced example, the NG Remotec Andros Wolverine EOD (explosive ordinance disposal) mobile manipulator.
- In particular, we will be looking at the arm in its "kinematic home position" (*i.e.*, all the joint variables θ_i's (and d_i's) are set to zero).

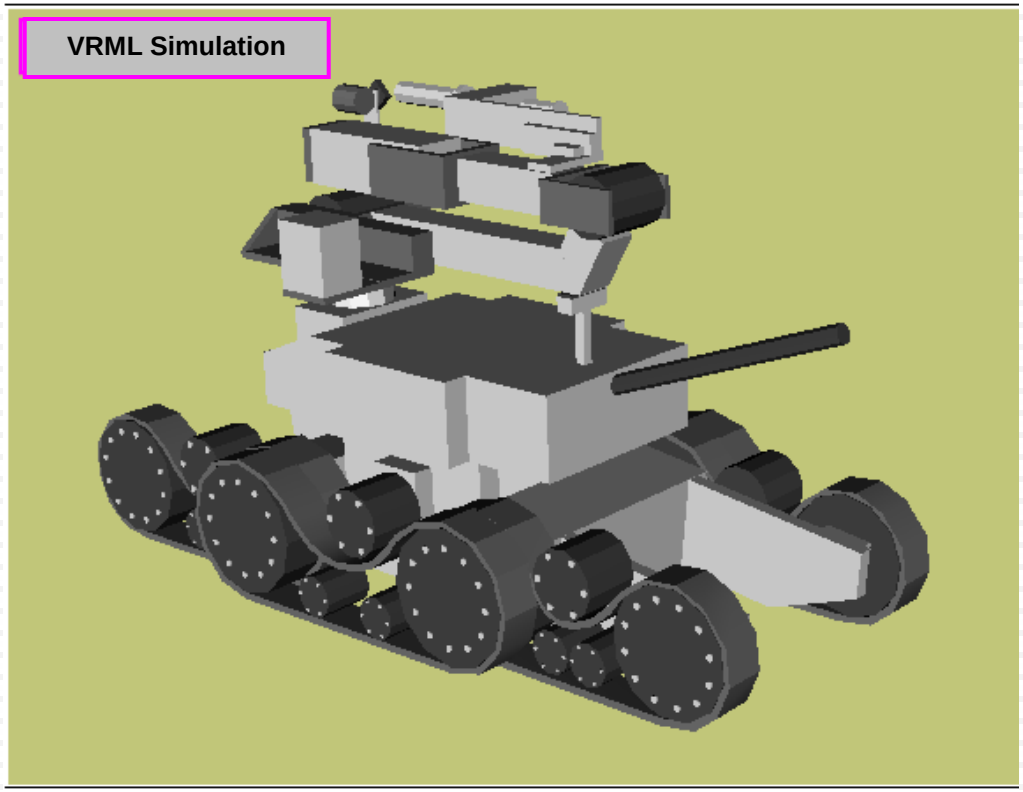

i. Identify the joint axes and draw ∞ lines along them.

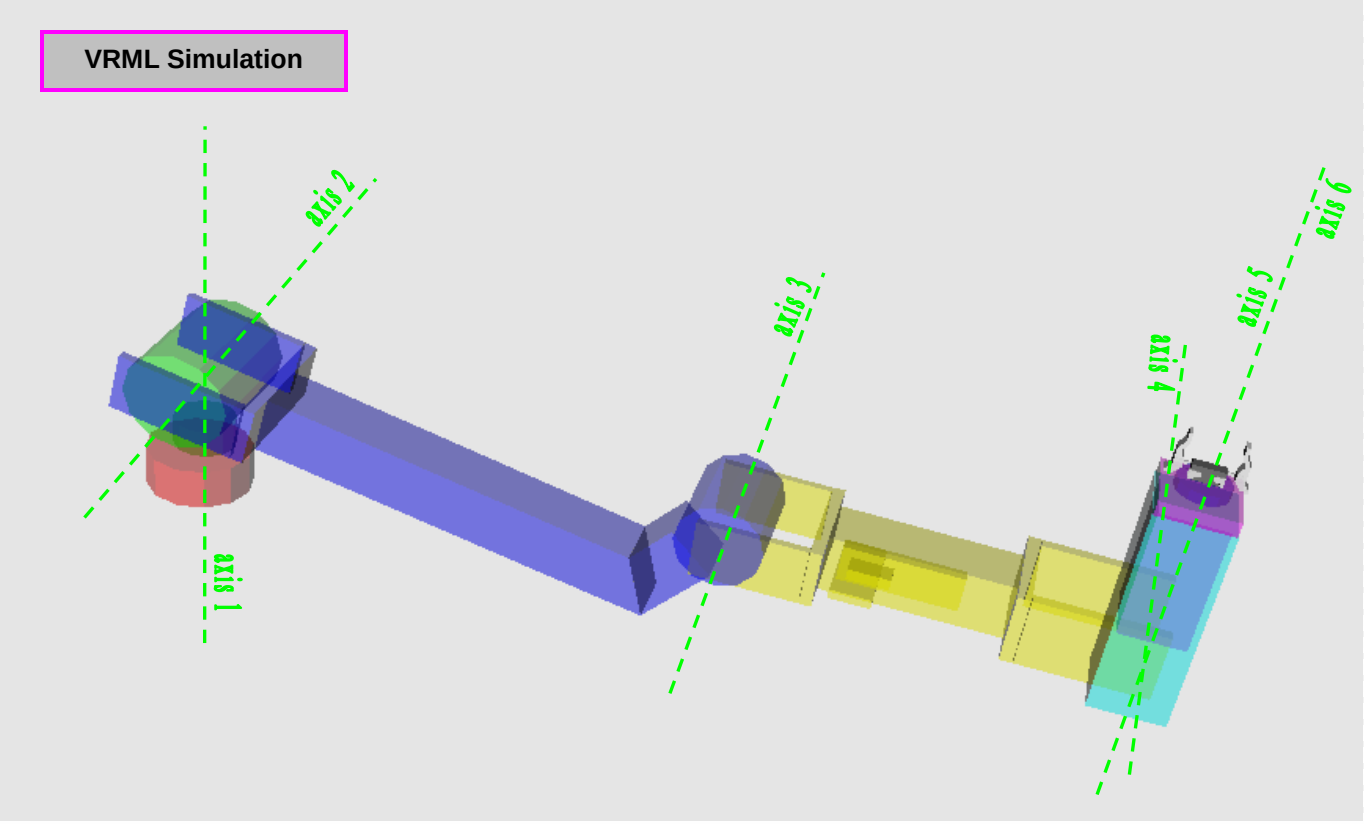

ii. Assign the link ($i-1^{th}$) coordinate frame origin at the point along the axis $i-1$ where the mutual perpendicular (between axis $i-1$ and axis i) meets it.

Note: Since there is no mutual perpendicular between axis 6 and axis 7 (non-existent), the origin of frame {6} can be placed anywhere on axis 6.

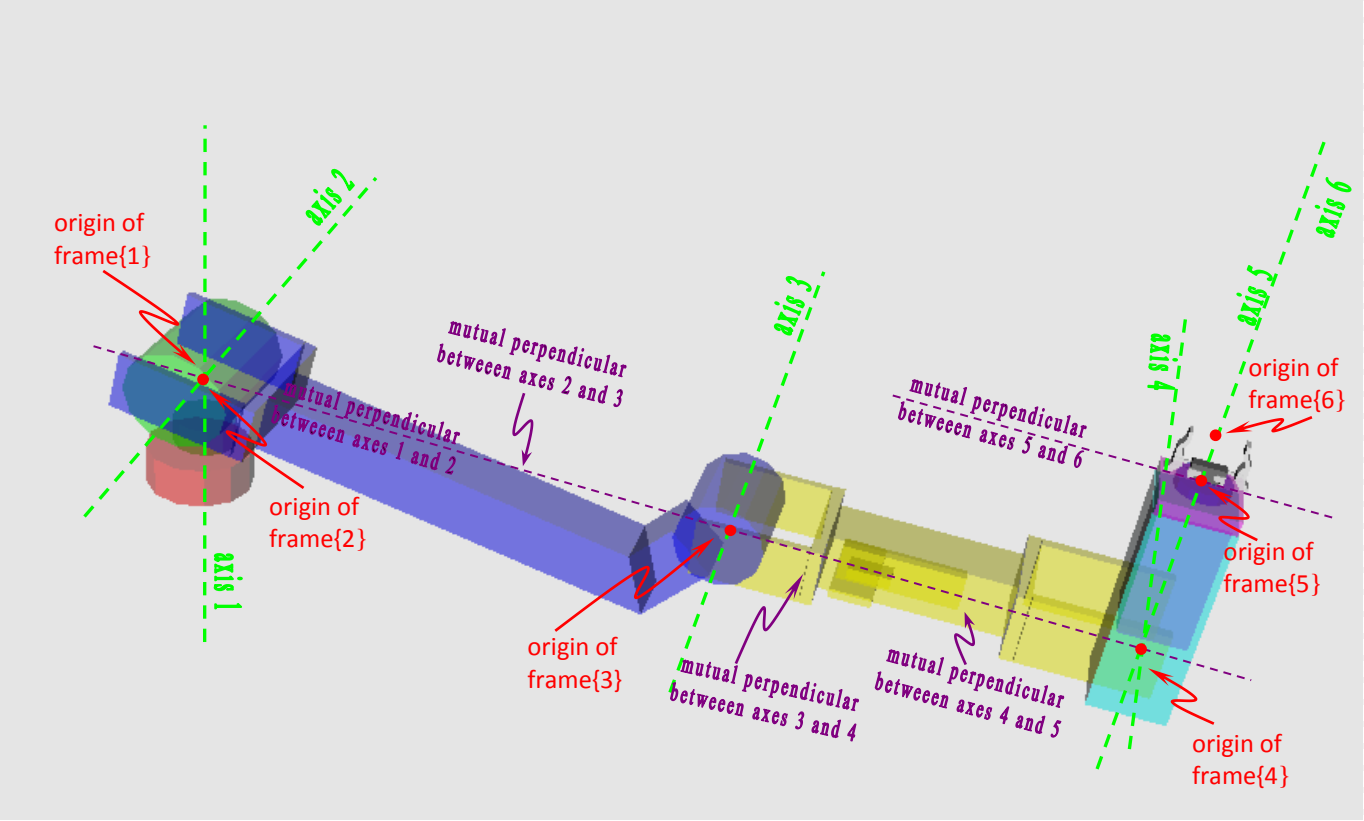

iii. Assign the $\hat{\vec{z}}_{i-1}$ direction along the $i-1^{\text{th}}$ axis.

Note: The direction of *z*-axis is not unique.

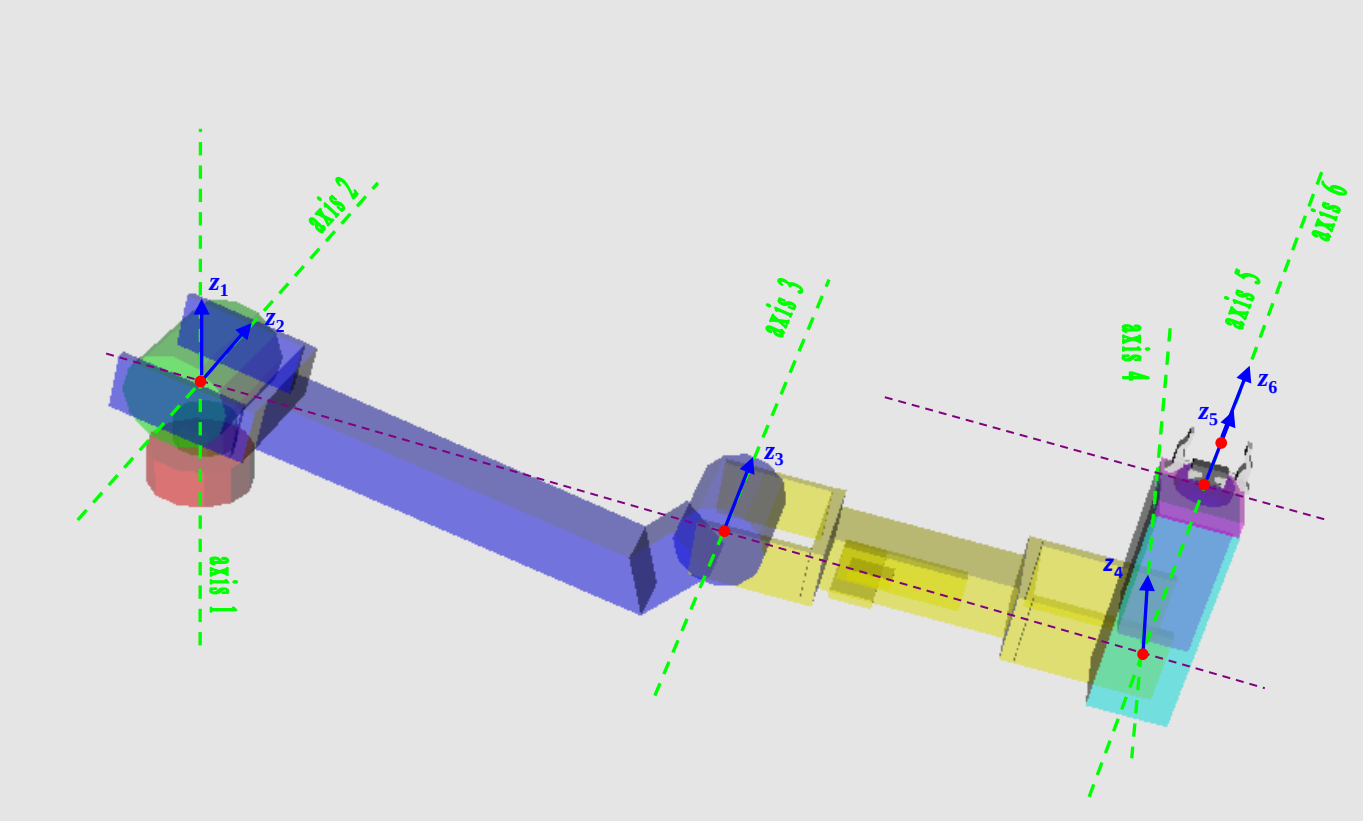

iv. Assign the $\hat{\vec{x}}_{i-1}$ axis along the mutual perpendicular, from $\hat{\vec{z}}_{i-1}$ to $\hat{\vec{z}}_i$.

For *i* = 2, $\hat{\vec{x}}_1$ axis from $\hat{\vec{z}}_1$ to $\hat{\vec{z}}_2$ (not unique since axis 1 and axis 2 intersect).

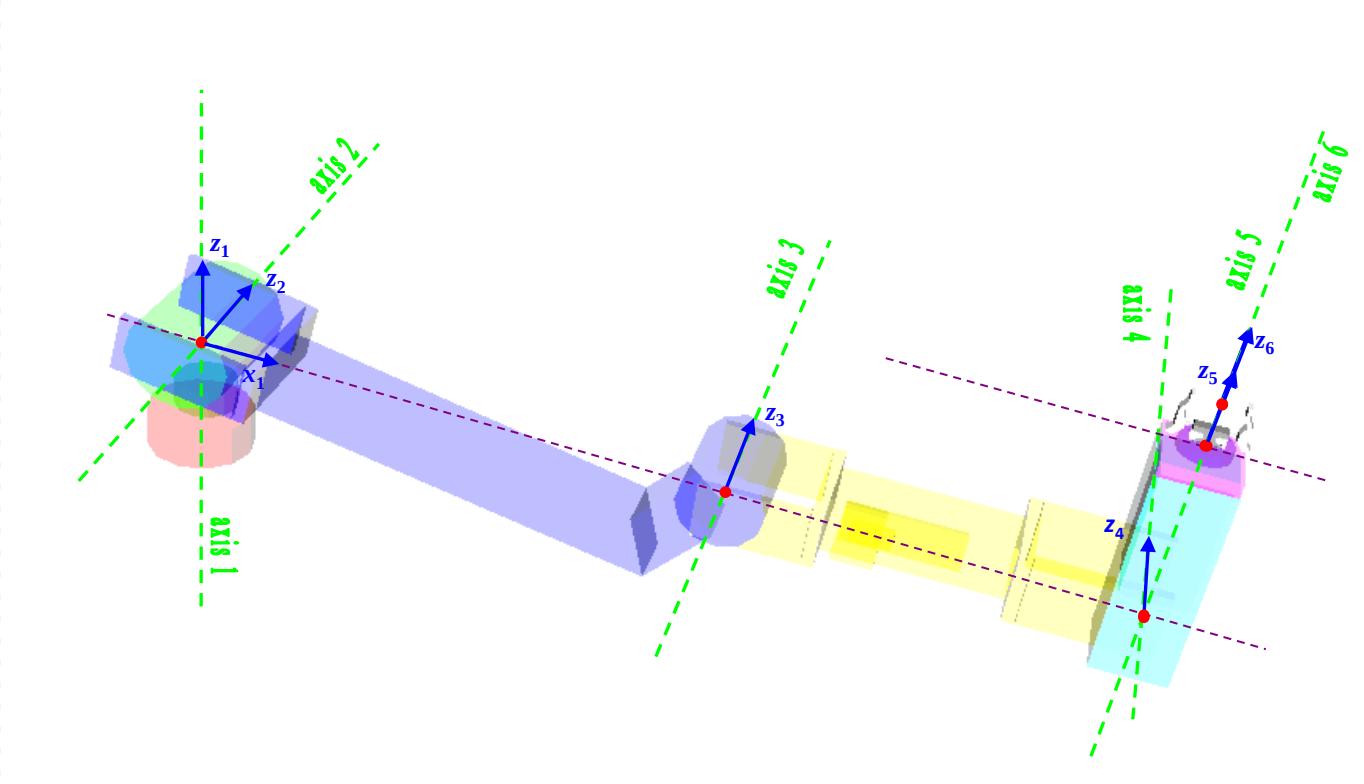

iv. Assign the $\hat{\vec{x}}_{i-1}$ axis along the mutual perpendicular, from $\hat{\vec{z}}_{i-1}$ to $\hat{\vec{z}}_i$.

For *i* = 3, $\hat{\vec{x}}_2$ axis from $\hat{\vec{z}}_2$ to $\hat{\vec{z}}_3$ (unique).

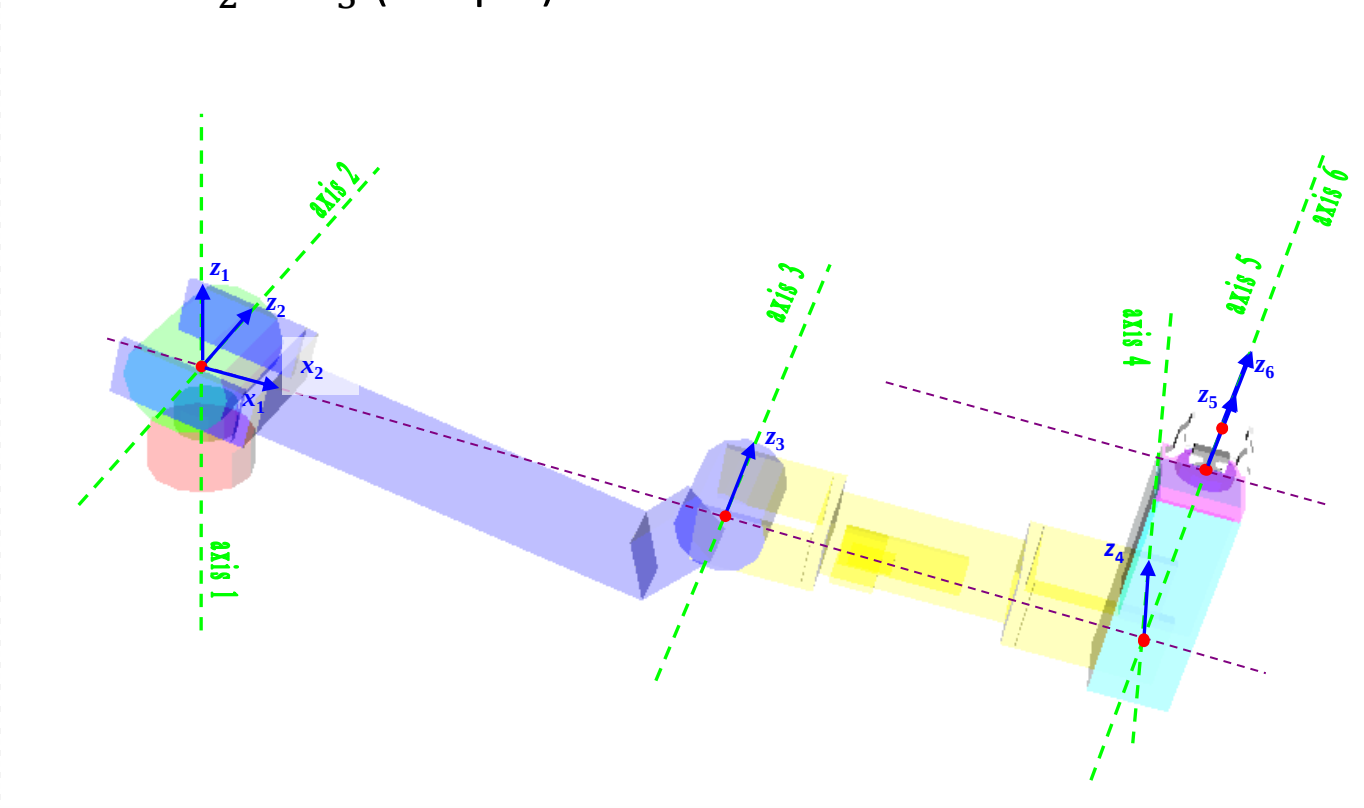

iv. Assign the $\hat{\vec{x}}_{i-1}$ axis along the mutual perpendicular, from $\hat{\vec{z}}_{i-1}$ to $\hat{\vec{z}}_i$.

For *i* = 4, $\hat{\vec{x}}_3$ axis from $\hat{\vec{z}}_3$ to $\hat{\vec{z}}_4$ (unique).

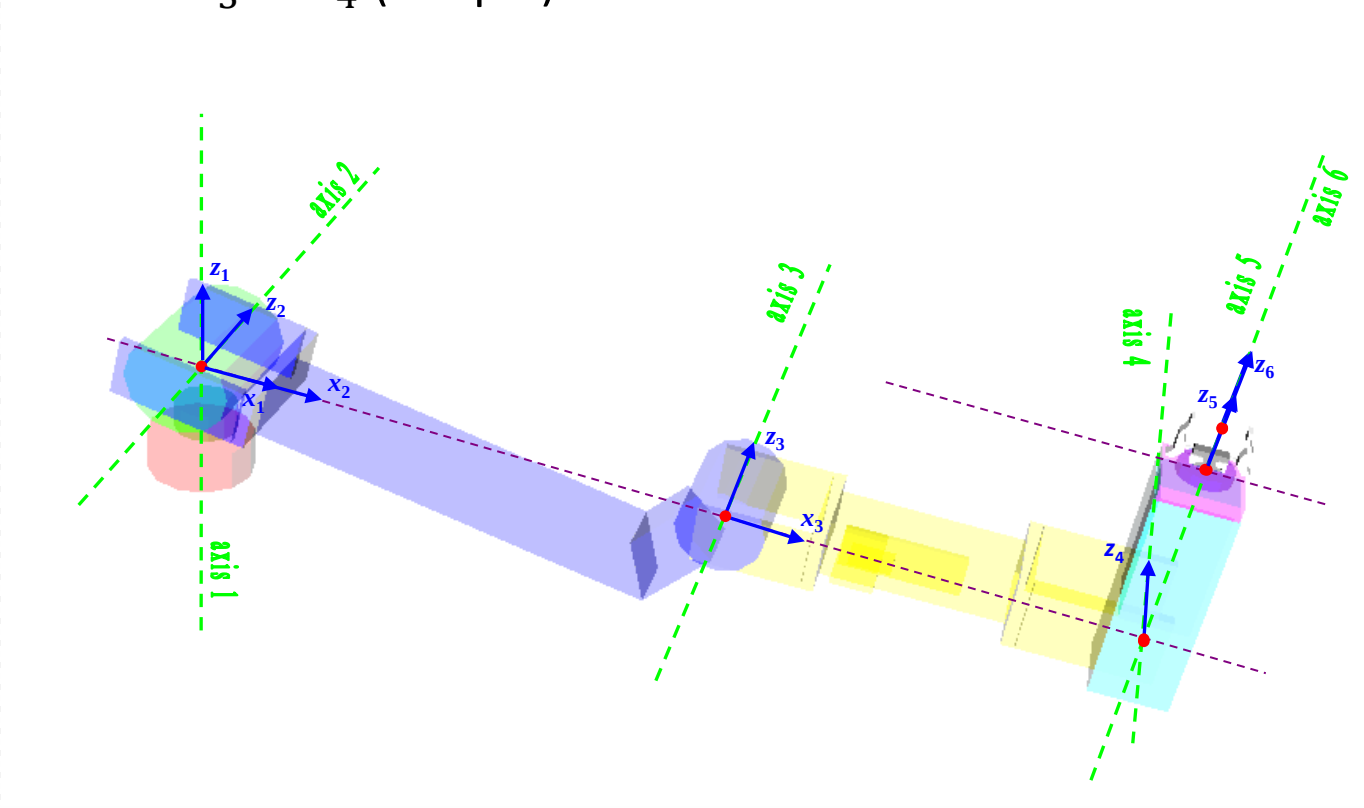

iv. Assign the $\hat{\vec{x}}_{i-1}$ axis along the mutual perpendicular, from $\hat{\vec{z}}_{i-1}$ to $\hat{\vec{z}}_i$.

For *i* = 5, $\hat{\vec{x}}_4$ axis from $\hat{\vec{z}}_4$ to $\hat{\vec{z}}_5$ (not unique since axis 4 and axis 5 intersect).

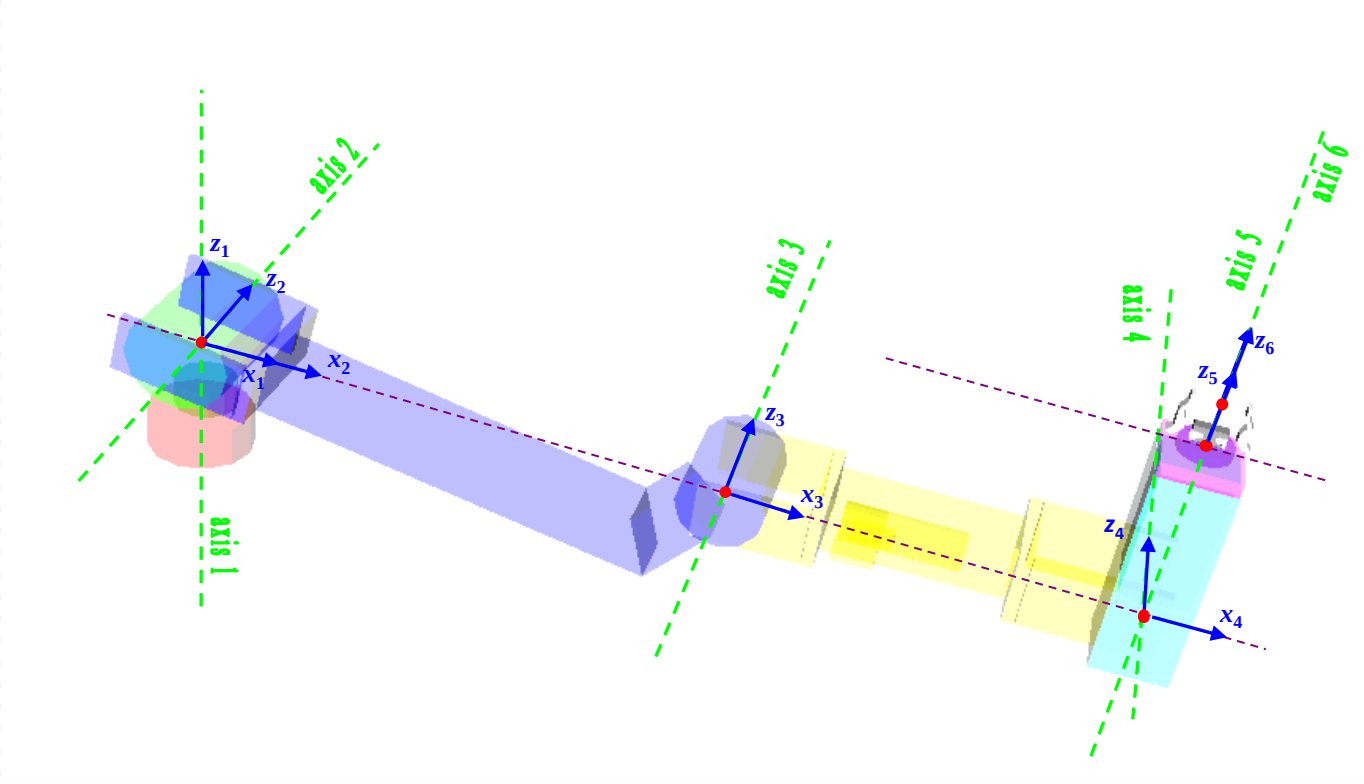

iv. Assign the $\hat{\vec{x}}_{i-1}$ axis along the mutual perpendicular, from $\hat{\vec{z}}_{i-1}$ to $\hat{\vec{z}}_i$.

For *i* = 6, $\hat{\vec{x}}_5$ axis from $\hat{\vec{z}}_5$ to $\hat{\vec{z}}_6$ (not unique since axis 5 and axis 6 are colinear).

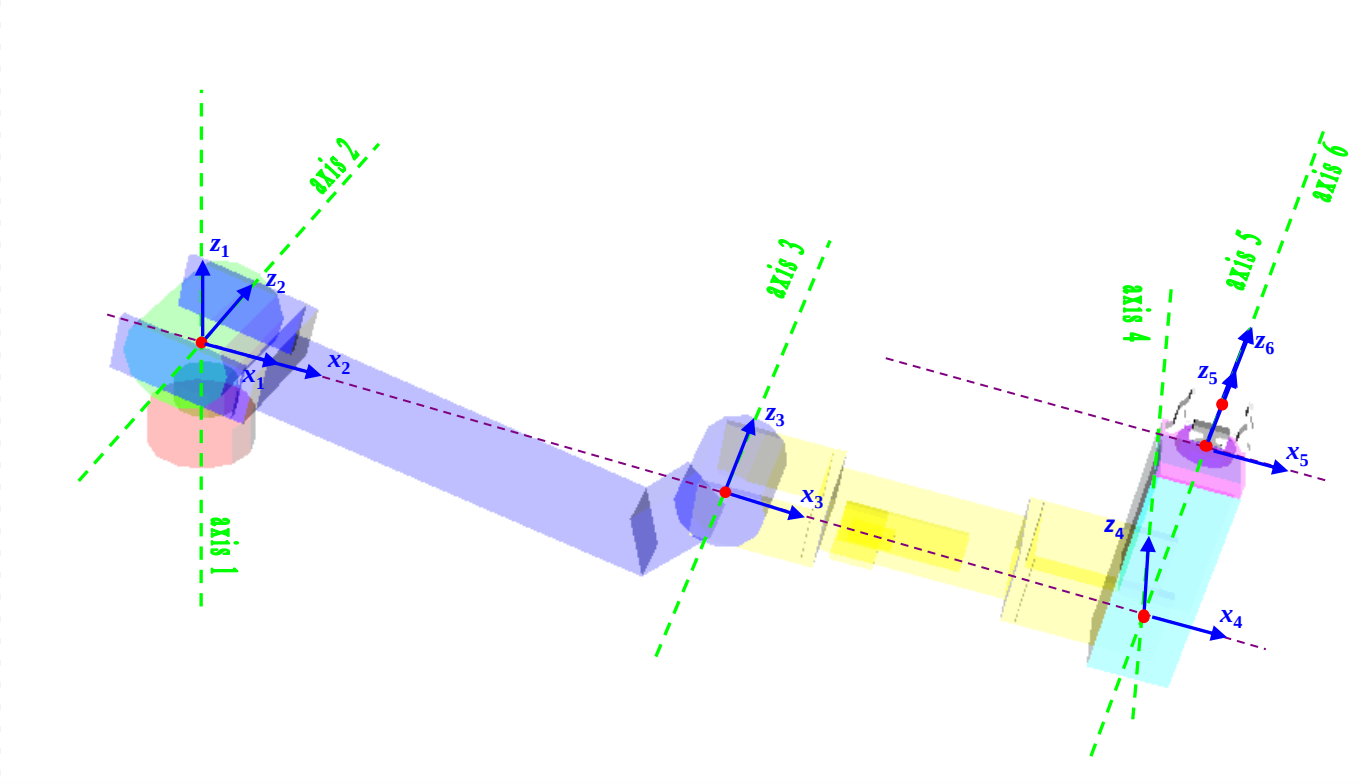

iv. Assign the $\hat{\vec{x}}_{i-1}$ axis along the mutual perpendicular, from $\hat{\vec{z}}_{i-1}$ to $\hat{\vec{z}}_i$.

For *i* = 7, $\hat{\vec{x}}_6$ axis from $\hat{\vec{z}}_6$ to $\hat{\vec{z}}_7$ (not unique since axis 7 does not exist).

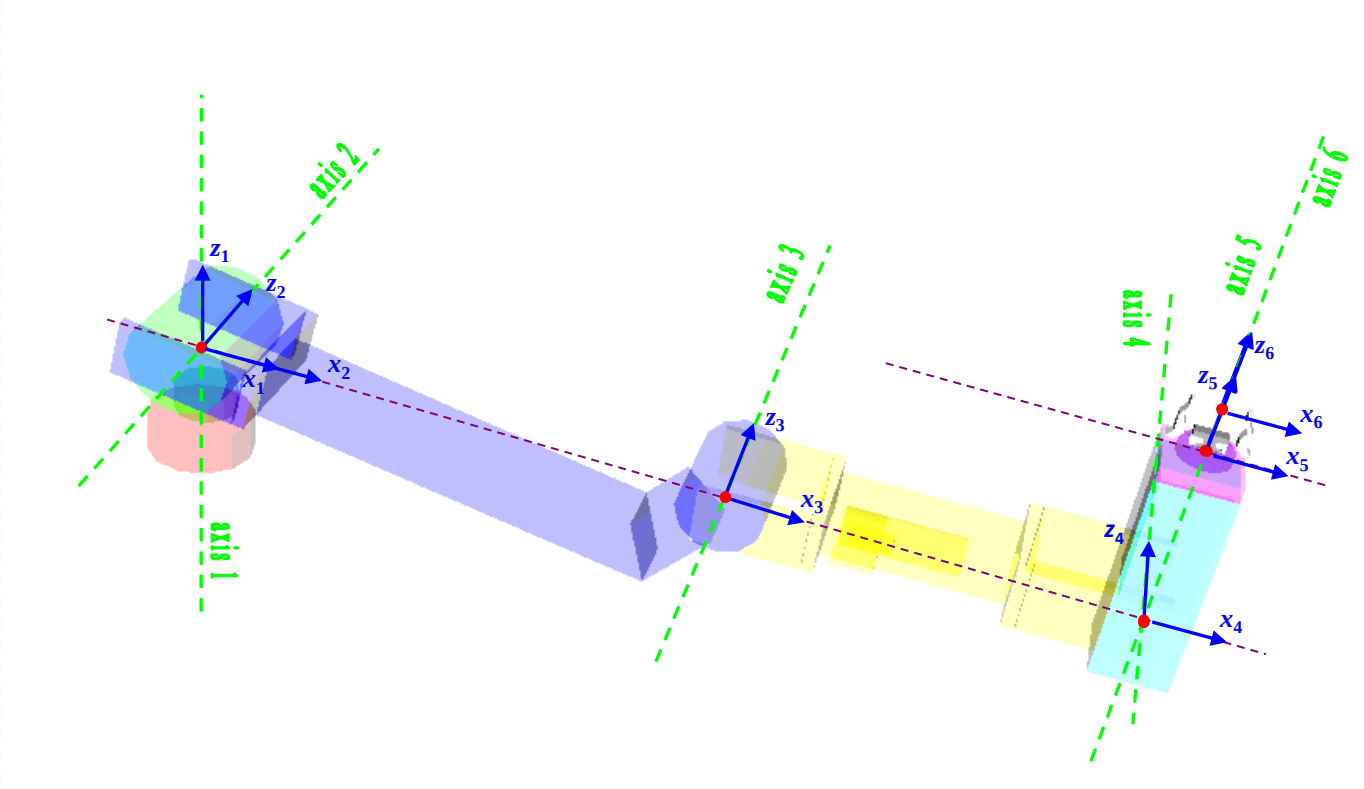

v. Include the $\hat{\vec{y}}_{i-1}$ axis to complete the coordinate system.
Recall: Right-hand coordinate system.

vi. Add a base frame {0} and a tool frame (if desired).
Note: Must adhere to the two D-H constraints when choosing frames {0}!

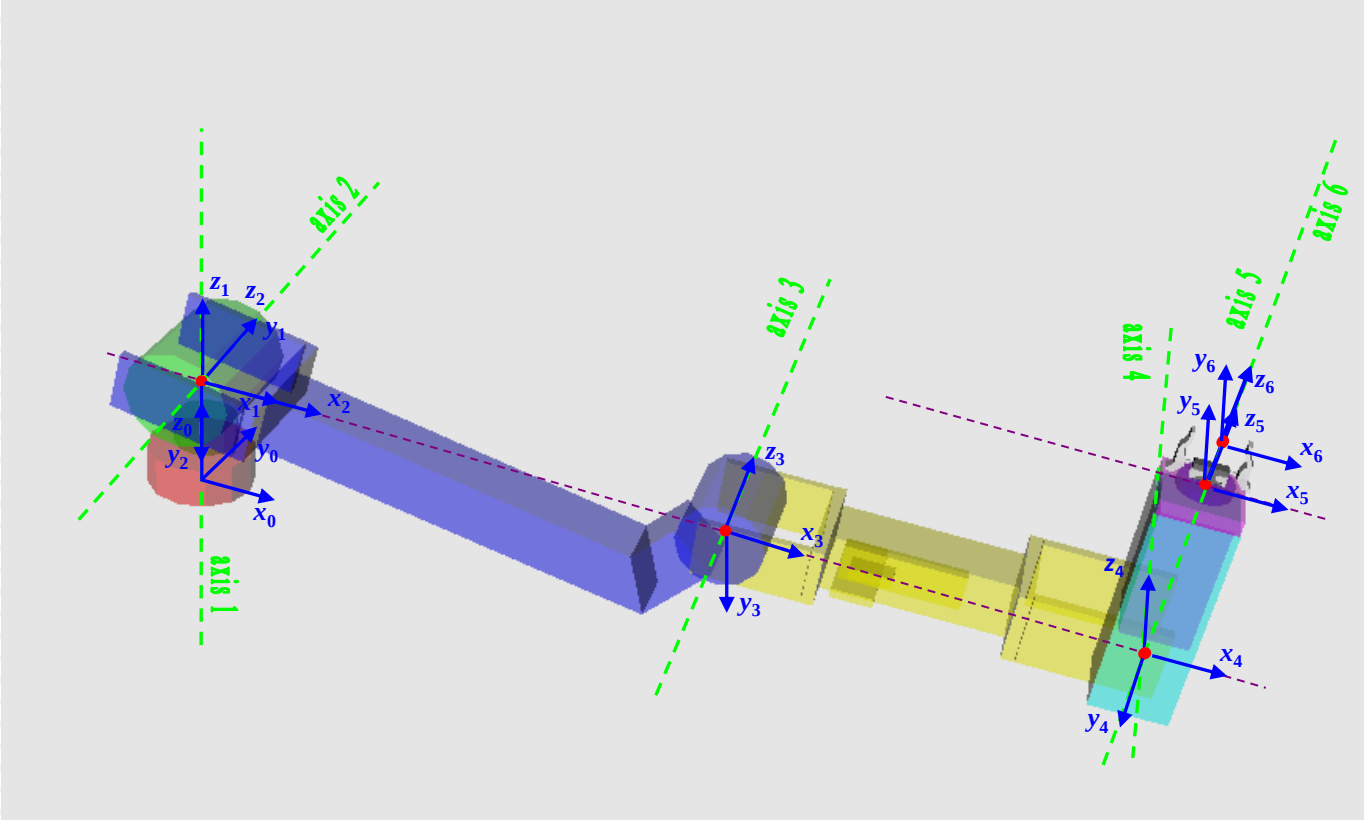

D-H params / i	α_{i-1}	a_{i-1}	d_i	θ_i
1	0	0	d_1	$\theta_1(t)$
2	–90°	0	0	$\theta_2(t)$
3	0	a_2	0	$\theta_3(t)$
4	0	a_3	0	$\theta_4(t)$
5	90°	0	$d_5(t)$	0
6	0	0	d_6	$\theta_6(t)$

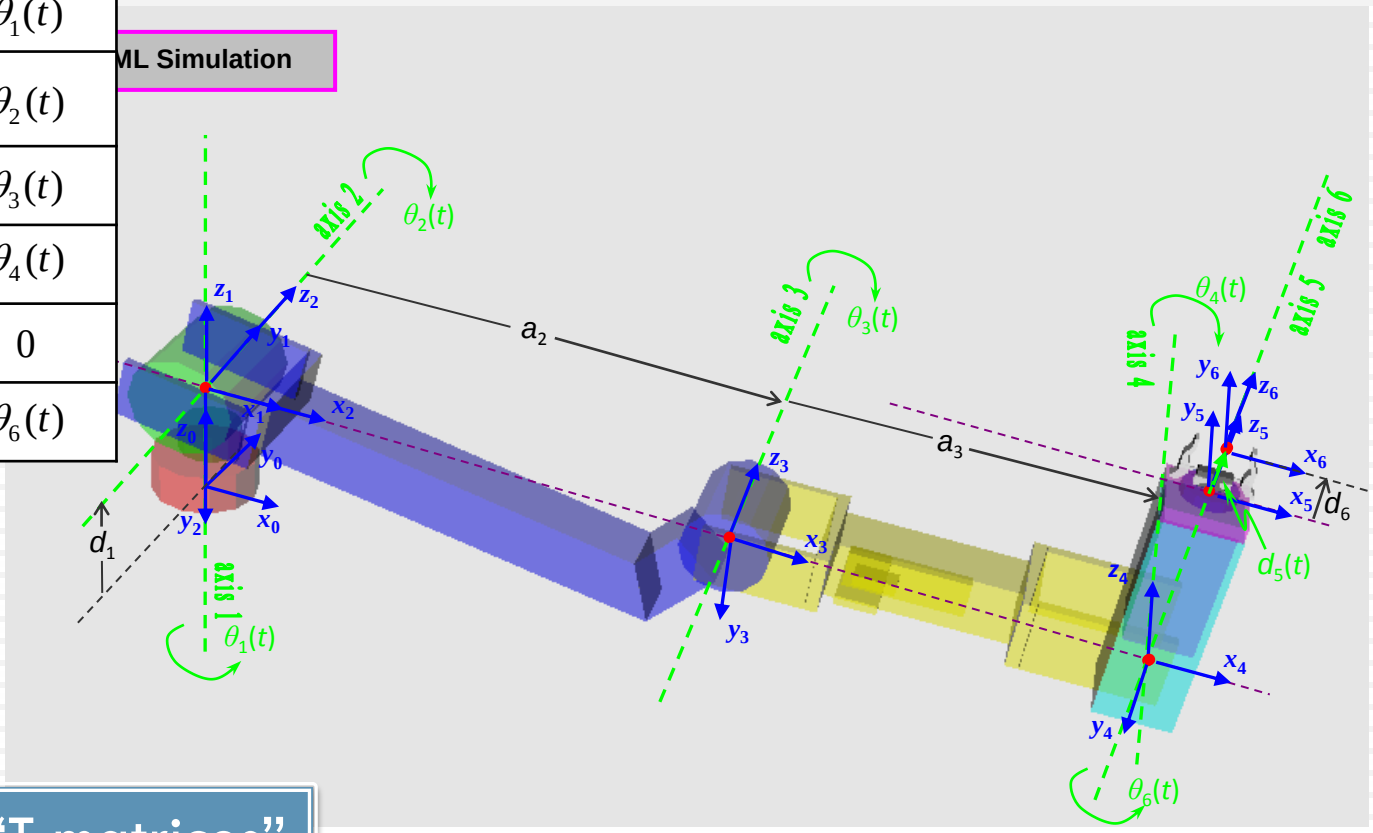

Next, generate the "T-matrices"

- Courtesy of Mathematica
  - Andros Example.pdf

Note:

1. **The robot is not truly in the "kinematic home position" as $d_5(t)$ is not equal to zero.**
2. **The joint displacements d_1 and d_6 could be set to zero, however, the coordinate frames would look cluttered.**

- **Let us now use the D-H parameters from the link table to construct the homogeneous matrices which will relate one link coordinate frame to the next.**

$$ {}^{0}_{1}T\left(\alpha_0, a_0, d_1, \theta_1(t)\right) = {}^{0}_{1}T\left(0, 0, d_1, \theta_1(t)\right) = \begin{bmatrix} C_1 & -S_1 & 0 & 0 \\ S_1 & C_1 & 0 & 0 \\ 0 & 0 & 1 & d_1 \\ 0 & 0 & 0 & 1 \end{bmatrix} $$

$$ {}^{1}_{2}T\left(\alpha_1, a_1, d_2, \theta_2(t)\right) = {}^{1}_{2}T\left(-90, 0, 0, \theta_2(t)\right) = \begin{bmatrix} C_2 & -S_2 & 0 & 0 \\ 0 & 0 & 1 & 0 \\ -S_2 & -C_2 & 0 & 0 \\ 0 & 0 & 0 & 1 \end{bmatrix} $$

$$ {}^{2}_{3}T\left(\alpha_2, a_2, d_3(t), \theta_3(t)\right) = {}^{2}_{3}T\left(0, a_2, 0, \theta_3(t)\right) = \begin{bmatrix} C_3 & -S_3 & 0 & a_2 \\ S_3 & C_3 & 0 & 0 \\ 0 & 0 & 1 & 0 \\ 0 & 0 & 0 & 1 \end{bmatrix} $$

$$ {}^{3}_{4}T\left(\alpha_3, a_3, d_4, \theta_4(t)\right) = {}^{3}_{4}T\left(0, a_3, 0, \theta_4(t)\right) = \begin{bmatrix} C_4 & -S_4 & 0 & a_3 \\ S_4 & C_4 & 0 & 0 \\ 0 & 0 & 1 & 0 \\ 0 & 0 & 0 & 1 \end{bmatrix} $$

$$ {}^{4}_{5}T\left(\alpha_4, a_4, d_5(t), \theta_5\right) = {}^{4}_{5}T\left(90, 0, d_5(t), 0\right) = \begin{bmatrix} 1 & 0 & 0 & 0 \\ 0 & 0 & -1 & -d_5 \\ 0 & 1 & 0 & 0 \\ 0 & 0 & 0 & 1 \end{bmatrix} $$

$$ {}^{5}_{6}T\left(\alpha_5, a_5, d_6, \theta_6(t)\right) = {}^{5}_{6}T\left(0, 0, d_6, \theta_6(t)\right) = \begin{bmatrix} C_6 & -S_6 & 0 & 0 \\ S_6 & C_6 & 0 & 0 \\ 0 & 0 & 1 & d_6 \\ 0 & 0 & 0 & 1 \end{bmatrix} $$

- **Therefore, we can now compute the coordinates of the gripper (frame {6}) as seen from the base frame (i.e. frame {0}) of reference, in terms of the 6 joint variables ($\theta_1, \theta_2, \theta_3, \theta_4, d_5, \theta_6$).**

$$ {}^{0}_{6}T = {}^{0}_{1}T\,{}^{1}_{2}T\,{}^{2}_{3}T\,{}^{3}_{4}T\,{}^{4}_{5}T\,{}^{5}_{6}T $$

$$ = \begin{bmatrix} C_1C_6C_{234} - S_1S_6 & -C_6S_1 - C_1C_{234}S_6 & C_1S_{234} & C_1\left(a_2C_2 + a_3C_{23} + (d_5 + d_6)S_{234}\right) \\ C_6C_{234}S_1 + C_1S_6 & C_1C_6 - C_{234}S_1S_6 & S_1S_{234} & S_1\left(a_2C_2 + a_3C_{23} + (d_5 + d_6)S_{234}\right) \\ -C_6S_{234} & S_6S_{234} & C_{234} & d_1 + C_{234}(d_5 + d_6) - a_2S_2 - a_3S_{23} \\ 0 & 0 & 0 & 1 \end{bmatrix} $$