NMT EE 589 & UNM ME 482/582
ROBOT ENGINEERING

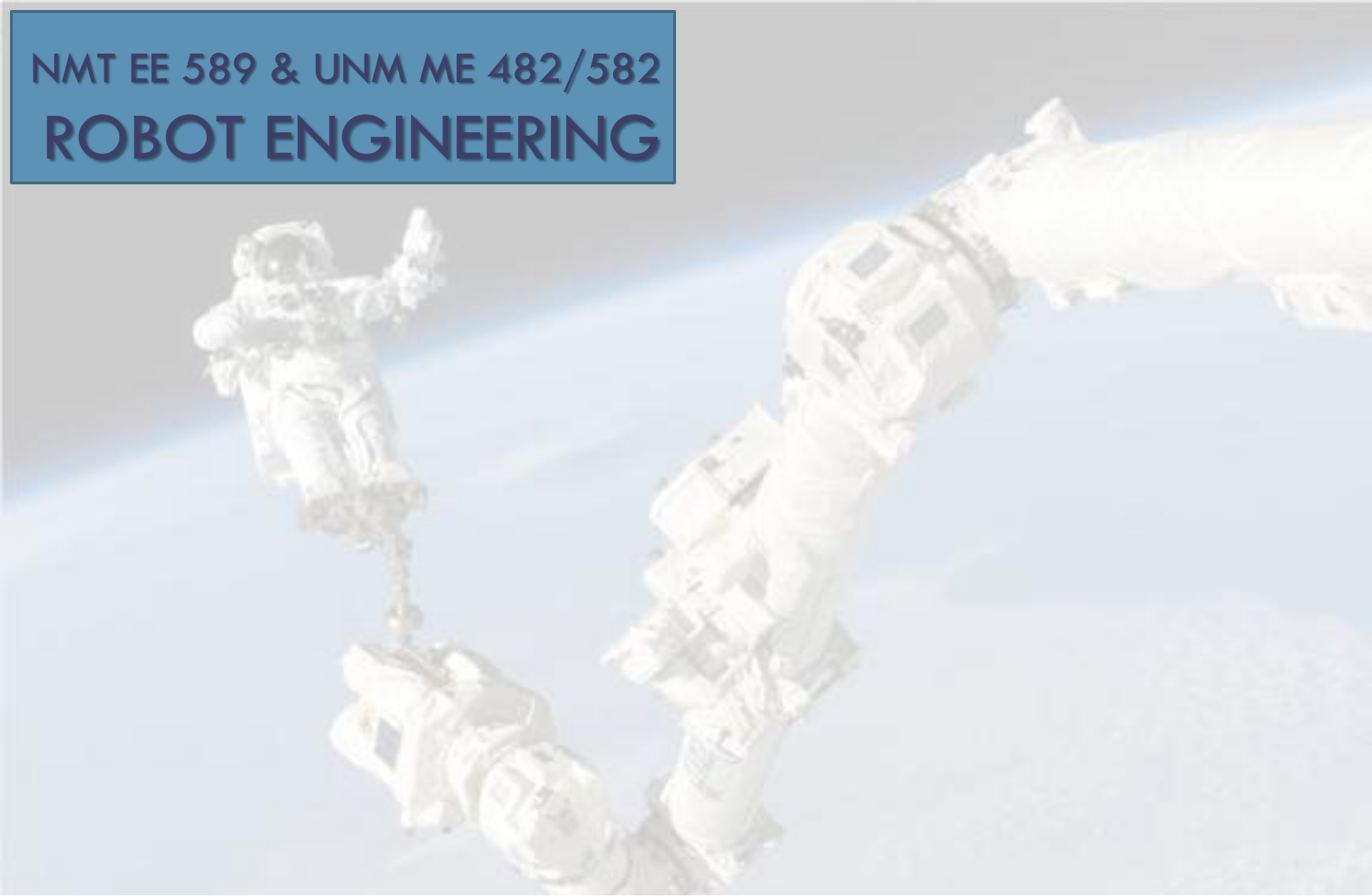

Dr. Stephen Bruder
NMT EE 589 & UNM ME 482/582

Course Information

- **Robot Engineering**
- **Classroom**
  - UNM: Woodward Hall room 147
  - NMT: Cramer 123
- **Schedule**
  - Tue/Thur 8:00 – 9:15am
- **Office Hours**
  - UNM: After class – 10am
- **Email**
  - bruder@aptec.com

- **TextBook**
  - Intro. to Robotics 3rd Ed. by J. J. Craig
- **Course WebPage**
  - geek.nmt.edu/~bruder
- **Materials**
  - MATLAB
  - Robotics Toolbox
  - Mathematica Examples
  - VRML/X3D examples
    - Viewer (Cartona 3D)
    - Editor (VrmlPad)

Grading Structure

- **Objective:**
  - It is the aim of this course to provide an introductory understanding of the multi-disciplinary field of robotics. Emphasis is placed on learning how to model and control robotic manipulators.
- **Weekly Assignments (30%)**
  - Due in class on the following Tuesday
- **Two Mid-Term Exams (30%)**
  - Mid Term Exam #1 – Tue 9th Oct
  - Mid Term Exam #2 – Tue 20th Nov
- **Final Exam (40%)**
  - In the form of a project (design and analyze your own Robot) – Due 5pm Tuesday 11 Dec

Course Outline

		Craig Chapter
1. Introduction to Robotics	• Some fundamental problems in the field of robotics	Chap. 1
2. Spatial Transformstions	• Rotation, translation, and the homogeneous transformation	Chap. 2
3. Kinematics	• Forward kinematics and the Denavit-Hartenburg parameters • Inverse kinematics	Chap. 3,4
4. Motion Kinematics	• Forward and inverse velocity and acceleration kinematics • Singularities and Jacobian matrices	Chap. 5
5. Static Forces/Moments and Torque	• Effect of forces/moments at the tool on the robot's joints • Effect of forces/moments at the robot's joints on the tool	Chap. 5
6. Trajectory Generation and Planning	• Various interpolation techniques	Chap. 7
7. Dynamics	• Kinetic/Potential energy and the equations of motion • The Euler-Lagrange approach • A structured dynamic model for rigid robots	Chap. 6
8. Control of Robots	• PID type controllers • More advanced control schemes (computed torque)	Chap. 9

Background

- **Typically, we are interested in placing the tool (or gripper) of the robot at a particular location (and orientation).**
- **To do this we need to model the way in which the tool pose (position and orientation) varies with the joint variables which we have control of.**

We have access to the **joint variables**
$\vec{\theta} = [\theta_1, l_2, \theta_3]$,
but we really want to control the **tool pose**
$\vec{x}$ = [position, orientation]

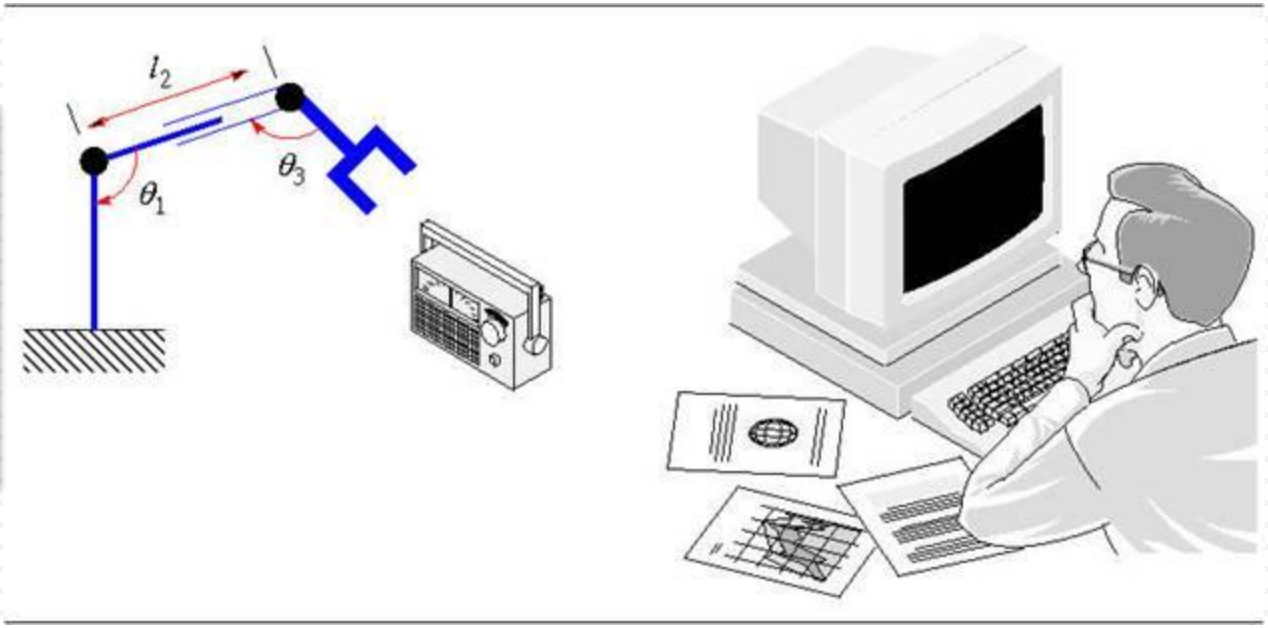

Joint Variables / Tool Pose

- **We need to develop a model of the explicit relationship between $\vec{\theta}$ and $\vec{x}$**

$$\vec{x} = \vec{f}(\vec{\theta})$$

- **In a realistic setting we would "sense" $\vec{\theta}(t)$ and try to "control" it to obtain a desired tool path $\vec{x}_d(t)$ over time.**

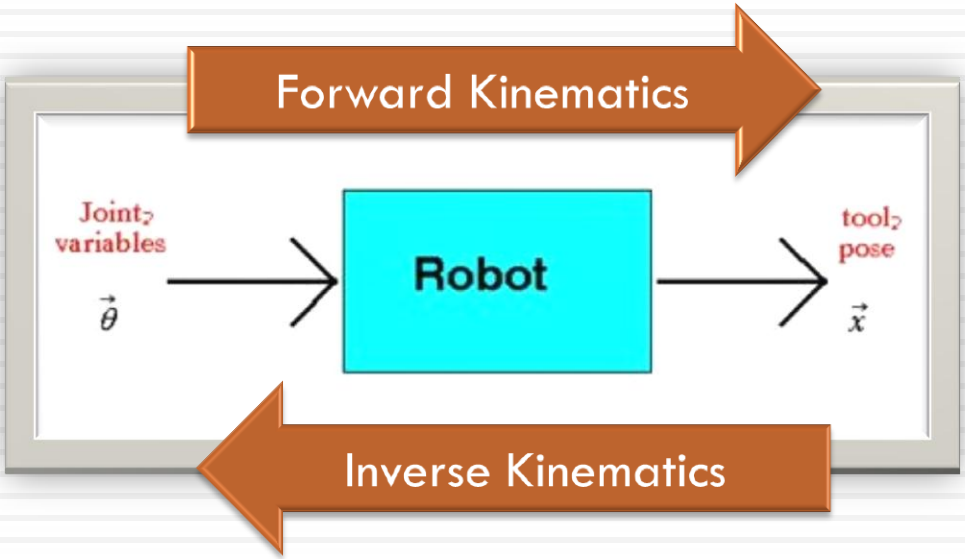

A Simple Two-Link "Robot-Artist"

- **Our first problem involves a robot with two rotary joints (θ_1, θ_2) and a spring loaded gold colored crayon as its tool. Eventually, we would like to design a "Robot-Artist", however, let's start with simple point-to-point motion.**
- **Question:**
  - If the tip of the crayon (robot tool) is to start at coordinates (x = 3, y = 1) and draw a line to coordinates (–2, 3), what are the robot's starting and ending joint angles?
- **Answer:**
  - It seems easier to determine the coordinates of the crayon given the joint angles (assume both links of length 2 units).

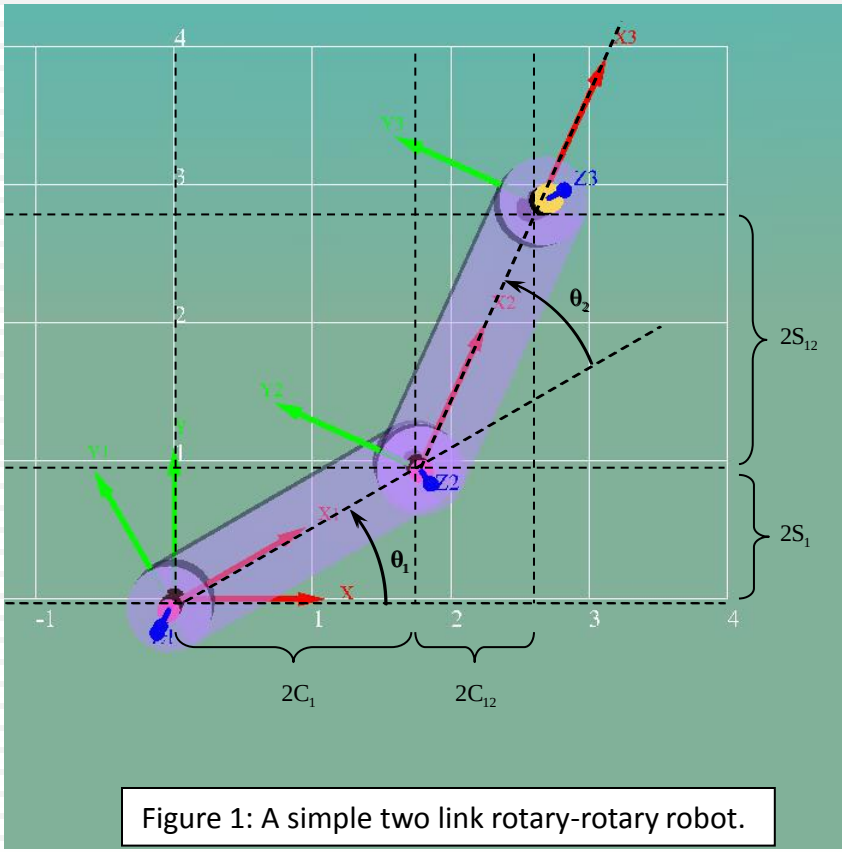

Figure 1: A simple two link rotary-rotary robot.

A Simple Two-Link "Robot-Artist"

- **Denoting the coordinates of the crayon as (x_3, y_3) (*i.e.*, origin of 3rd coordinate frame) and using the compact notation $C_i = \mathrm{Cos}(\theta_i)$, $S_i = \mathrm{Sin}(\theta_i)$, and for compound angles, $C_{ij} = \mathrm{Cos}(\theta_i + \theta_j)$ gives**
- $$x_3 = 2\,\mathrm{Cos}(\theta_1) + 2\,\mathrm{Cos}(\theta_1 + \theta_2) \qquad \textbf{(1.1)}$$
  $$y_3 = 2\,\mathrm{Sin}(\theta_1) + 2\,\mathrm{Sin}(\theta_1 + \theta_2) \qquad \textbf{(1.2)}$$
- **Equations (1.1) and (1.2) constitute the "<u>Forward Kinematics</u>" Equations of the robot. Squaring both equations and adding gives**
- $$x_3{}^2 + y_3{}^2 = 8 + 8(S_1 S_{12} + C_1 C_{12}) = 8 + 8C_2$$
- $$\therefore \quad \theta_2 = \mathrm{Cos}^{-1}\left\{\frac{x_3{}^2 + y_3{}^2 - 8}{8}\right\} \qquad \textbf{(1.3)}$$

  This is really two solns as $\mathrm{Cos}(\theta) = \mathrm{Cos}(-\theta)$
- **Multiply Equation (1.1) by S_1 and subtract from Equation (1.2) multiplied by C_1, yields:**
- $$C_1 y_3 - S_1 x_3 = 2\,S_{12}\,C_1 - 2\,C_{12}\,S_1 = 2\,S_2$$

A Simple Two-Link "Robot-Artist"

- **Substituting** $y_3 = r\,\mathrm{S}_\phi$ **and** $x_3 = r\,\mathrm{C}_\phi$**, thus,**
- $$\varphi = \mathrm{Tan}^{-1}\left(\frac{y_3}{x_3}\right) \quad \textbf{and} \quad r = \sqrt{{x_3}^2 + {y_3}^2}$$

  gives

  $$r(\mathrm{S}_\varphi \mathrm{C}_1 - \mathrm{C}_\varphi \mathrm{S}_1) = 2\,\mathrm{S}_2$$

  $$\Rightarrow \qquad \mathrm{Sin}(\varphi - \theta_1) = \frac{2\,\mathrm{S}_2}{r}$$

- $$\therefore \qquad \theta_1 = \mathrm{Tan}^{-1}\left(\frac{y_3}{x_3}\right) - \mathrm{Sin}^{-1}\left(\frac{2\,\mathrm{S}_2}{\sqrt{{y_3}^2 + {x_3}^2}}\right) \qquad \textbf{(1.4)}$$

- **Equations (1.3) and (1.4) are referred to as the "<u>Inverse Kinematics</u>" Equations of the robot.**

A Simple Two-Link "Robot-Artist"

- **Hence, if we want the robot to start drawing at (1, 3) we need**

$$\theta_2 = \mathrm{Cos}^{-1}\left\{\frac{1^2+3^2-8}{8}\right\} \simeq 75.5^\circ \simeq 1.318 \text{ rad}$$

and

$$\theta_1 \simeq -19.3^\circ \simeq -0.337 \text{ rad}$$

- **Similarly, to finish at (–2, 3) we need**

$$\theta_2 \simeq 51.3^\circ \simeq 0.896 \text{ rad}$$

and

$$\theta_1 \simeq 98^\circ \simeq 1.71 \text{ rad}$$

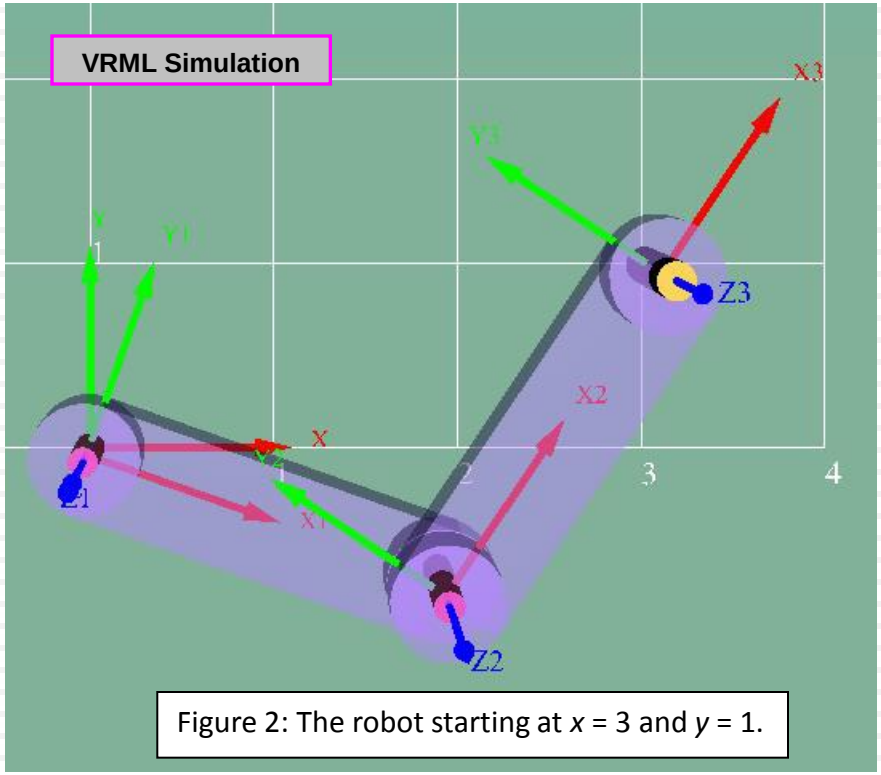

Figure 2: The robot starting at x = 3 and y = 1.

Issue #1: Non Unique Joint Angles

- For this particular robot starting at $\theta_2 \simeq -75.5^\circ \simeq -1.318$ rad and (using Equation (1.4)) $\theta_1 \simeq 56.1^\circ \simeq 0.98$ rad also places the crayon at (3, 1).
- In general, due to the non-linear nature of the forward kinematics equations the inverse equations typically may not be unique
  - or even exist in closed form

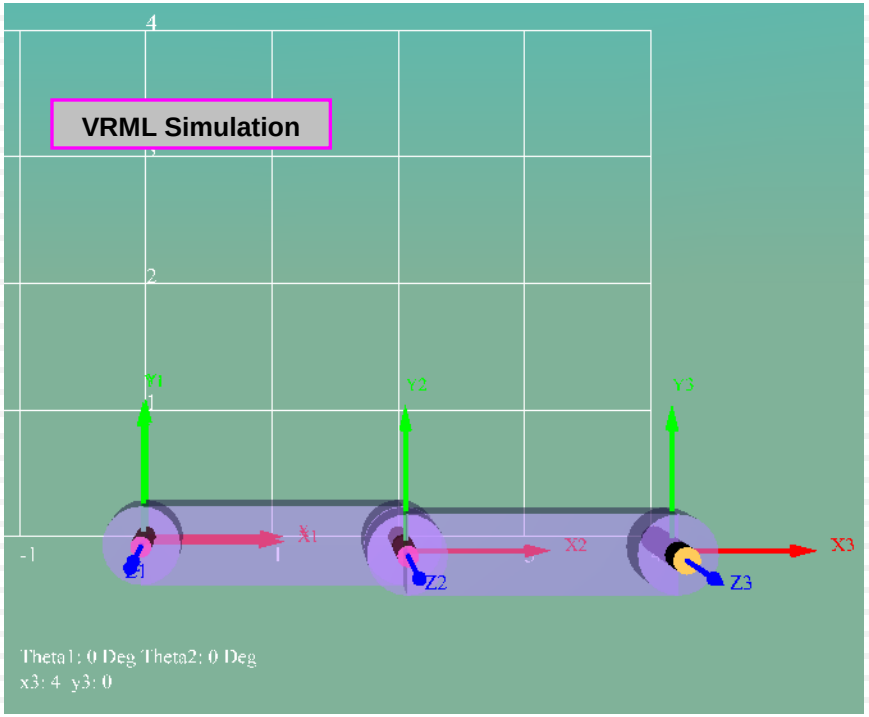

Issue #2: Trajectory Generation

- In the animation shown in Figure 1, to move the robot from a starting point to an ending point we simply increased the joint angles linearly with time.
- Note that this does NOT give rise to a straight line being drawn by the crayon!!
  - In general, a linear trajectory in "joint space" does not give rise to a linear tool trajectory (motion in Cartesian space).
- One approach to this problem is to interpolate between the starting and ending points along the desired tool trajectory and solve for the joint angles at these "via points".
- The animation that follows uses a starting point, ending point, and 9 via points, as shown in the table.

A Simple Two-Link "Robot-Artist"

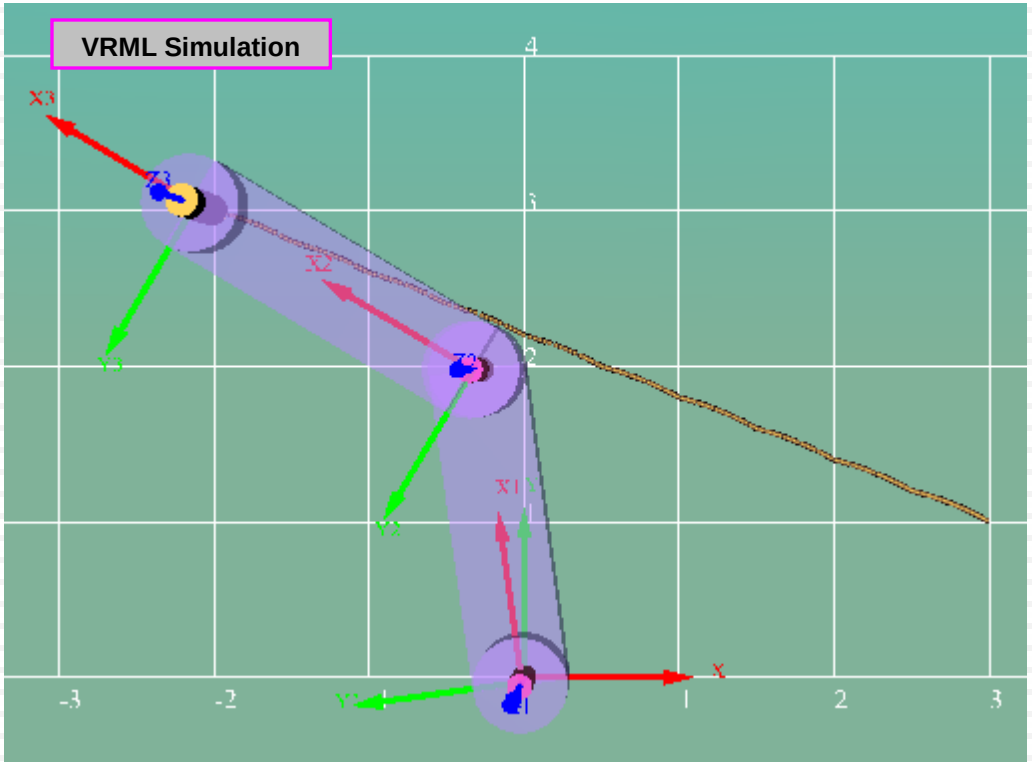

x_3	y_3	θ_1(rad)	θ_2(rad)
3.0	1.0	-0.337307	1.31812
2.5	1.2	-0.357258	1.60956
2.0	1.4	-0.303596	1.82864
1.5	1.6	-0.17283	1.98095
1.0	1.8	0.0336543	2.06009
0.5	2.0	0.296482	2.05867
0.0	2.2	0.582364	1.97686
–0.5	2.4	0.865099	1.82219
–1.0	2.6	1.13757	1.6008
–1.5	2.8	1.40937	1.30648
–2.0	3.0	1.71097	0.895665

Issue #3: Velocity Profile

- If we want the speed of the crayon to be constant, such that the line drawn is uniform, we will need to determine how the joint rates affect the velocity of the robot motion in the X-Y plane.
- An intuitive solution to this problem would be to differentiate the forward kinematic equation to generate an equation relating joint rates to position rates.
  - This leads to the topic of motion kinematics.

$$x_3 = f_1(\theta_1, \theta_2) \quad \rightarrow \quad \dot{x}_3 = \frac{\partial f_1}{\partial \theta_1}\dot{\theta}_1 + \frac{\partial f_1}{\partial \theta_2}\dot{\theta}_2$$

$$y_3 = f_2(\theta_1, \theta_2) \quad \rightarrow \quad \dot{y}_3 = \frac{\partial f_2}{\partial \theta_1}\dot{\theta}_1 + \frac{\partial f_2}{\partial \theta_2}\dot{\theta}_2$$

- **Issue #4: Dynamics and Control**
  - Finally, to control the motion of the robot in order to conduct the precise motions necessary for artwork we will need to model the dynamics of the robot which requires knowledge of the link masses, inertias, gravity, and other parameters to determine how the motor voltages (most common actuator type) give rise to joint torques and finally tool motions
    - This will require sensing of the joint "angles," also
    - Actuators to "drive" the joints, and
    - Force/Torque sensors at the "tip/tool" might also be desirable.

Robots in the "Real World"

Medicine
Da Vinci Surgical Robot

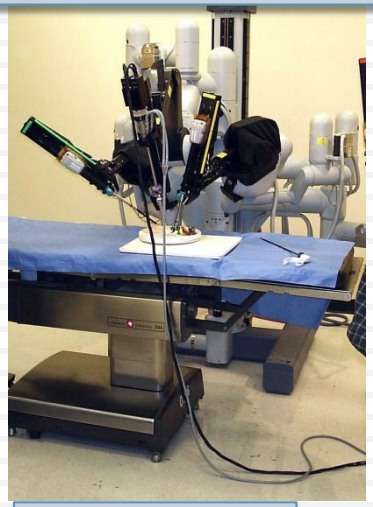

Entertainment
Honda's Asimo Robot

Military
Gladiator UGV / Predator UAV

Industrial
ABB IRB 580

Research
Boston Dynamics BigDog

Types of Robotic Manipulators

Type of Robot	Joint Illustration	Workspace	Example Robot
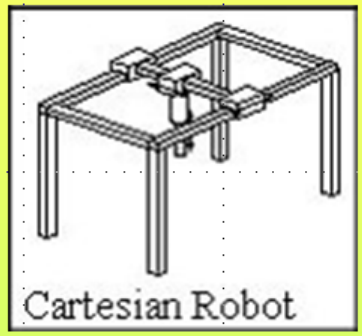 Cartesian Robot	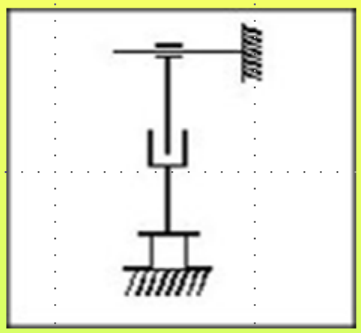	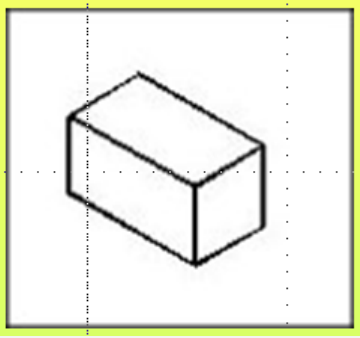	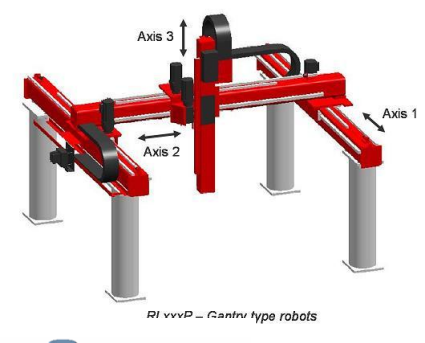
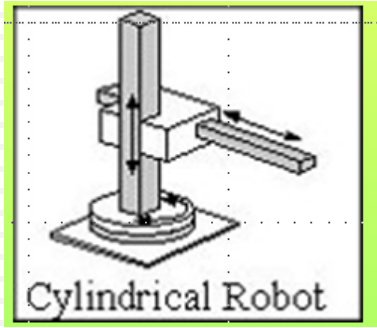 Cylindrical Robot	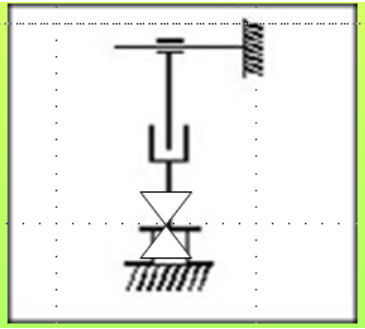	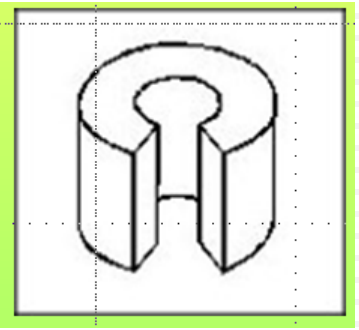	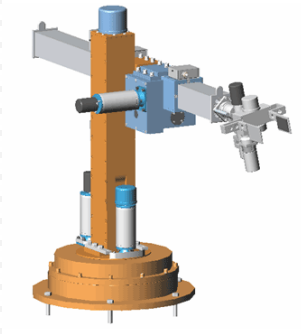
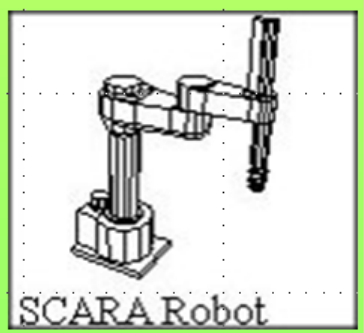 SCARA Robot	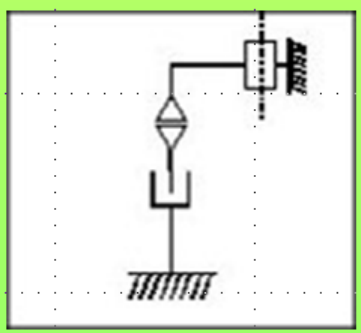	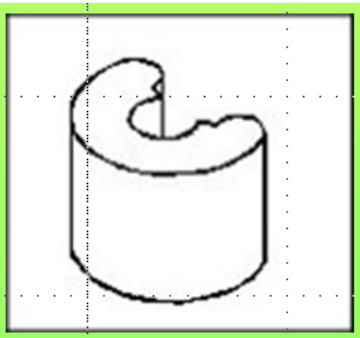	

Types of Robotic Manipulators

Type of Robot	Joint Illustration	Workspace	Example Robot
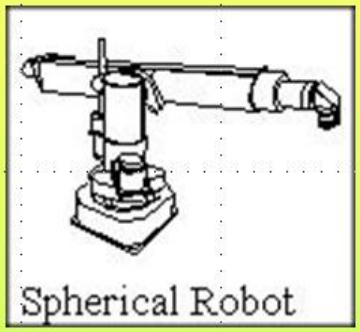 Spherical Robot	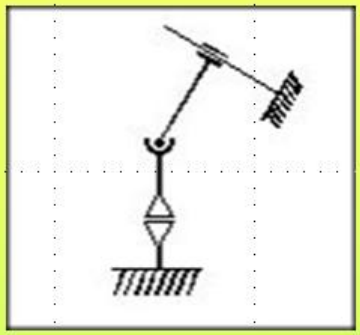	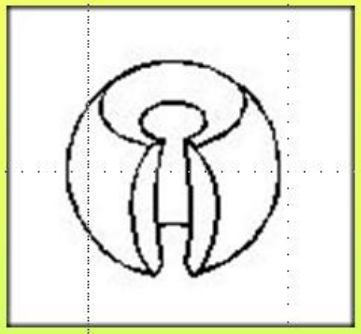	
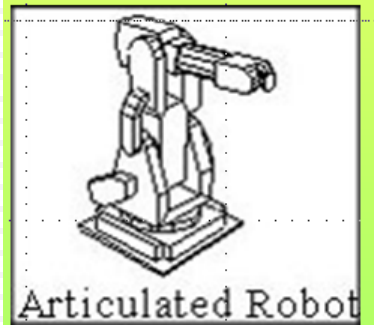 Articulated Robot	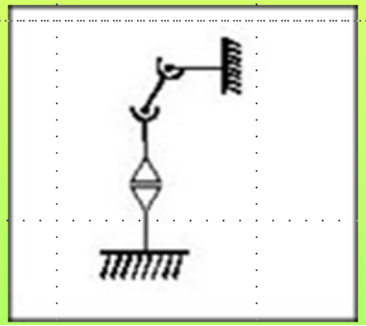	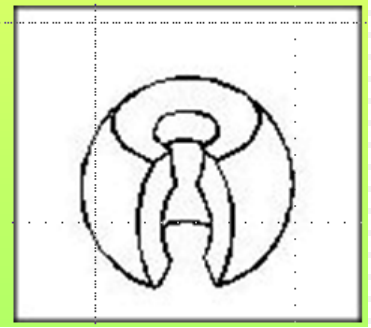	
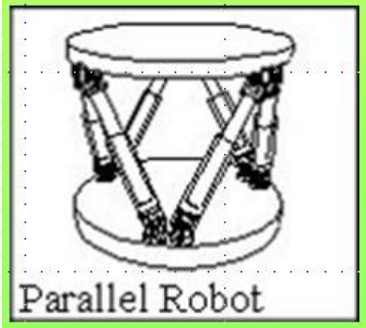 Parallel Robot